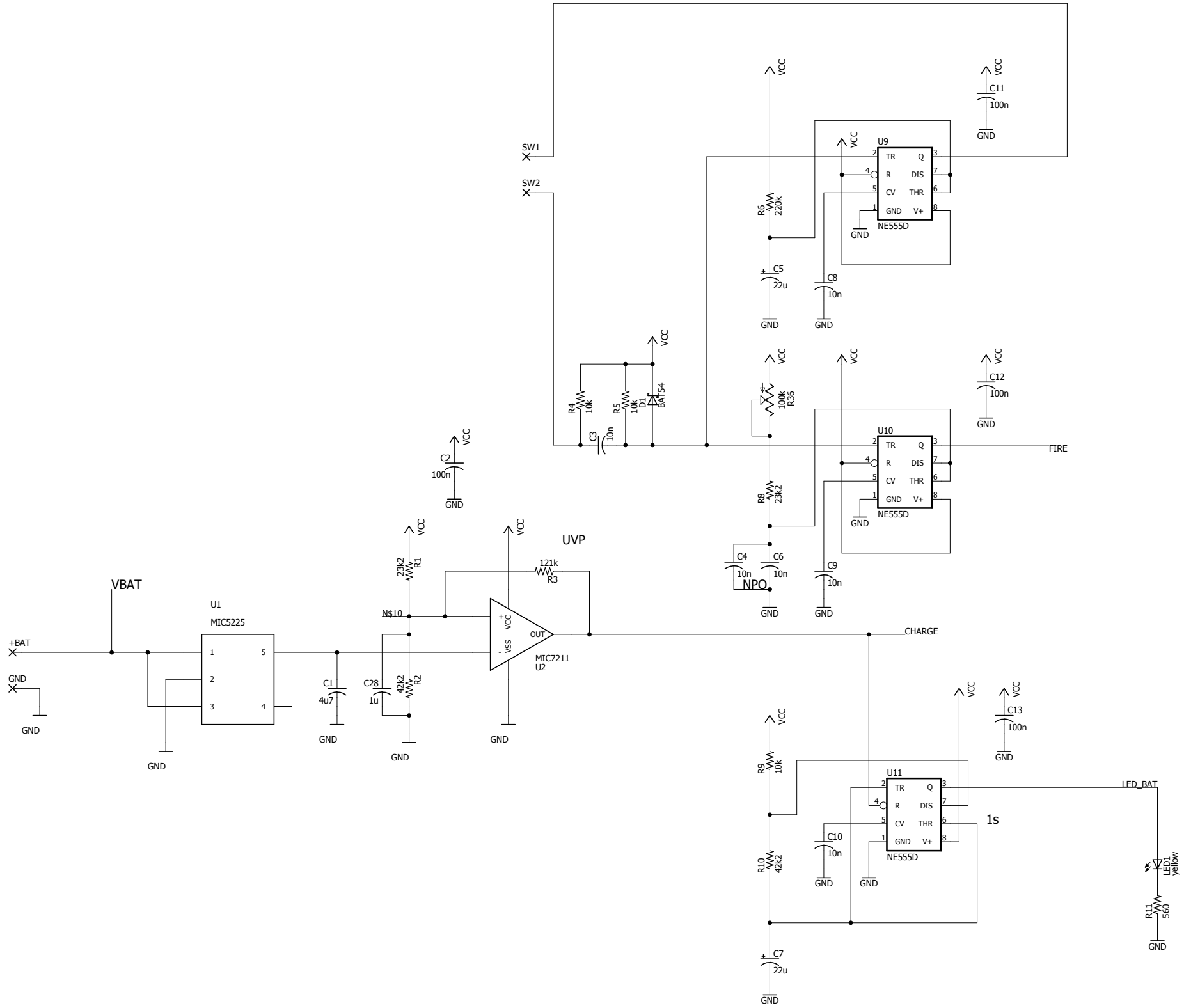
SW1
SW2
VCC
GND
C11
100n
U9
TR
Q
R
DIS
CV
THR
GND
V+
NE555D
R6
220k
C5
22u
C8
10n
R4
10k
R5
10k
D1
BAT54
C3
10n
R36
100k
C12
100n
U10
FIRE
R8
23k2
C4
10n
NPO
C6
10n
C9
10n
C2
100n
UVP
R1
23k2
R3
121k
N$10
VBAT
U1
MIC5225
+BAT
C1
4u7
C28
1u
R2
42k2
VSS
OUT
MIC7211
U2
CHARGE
C13
100n
U11
LED_BAT
1s
C10
10n
R9
10k
R10
42k2
C7
22u
LED1
yellow
R11
560

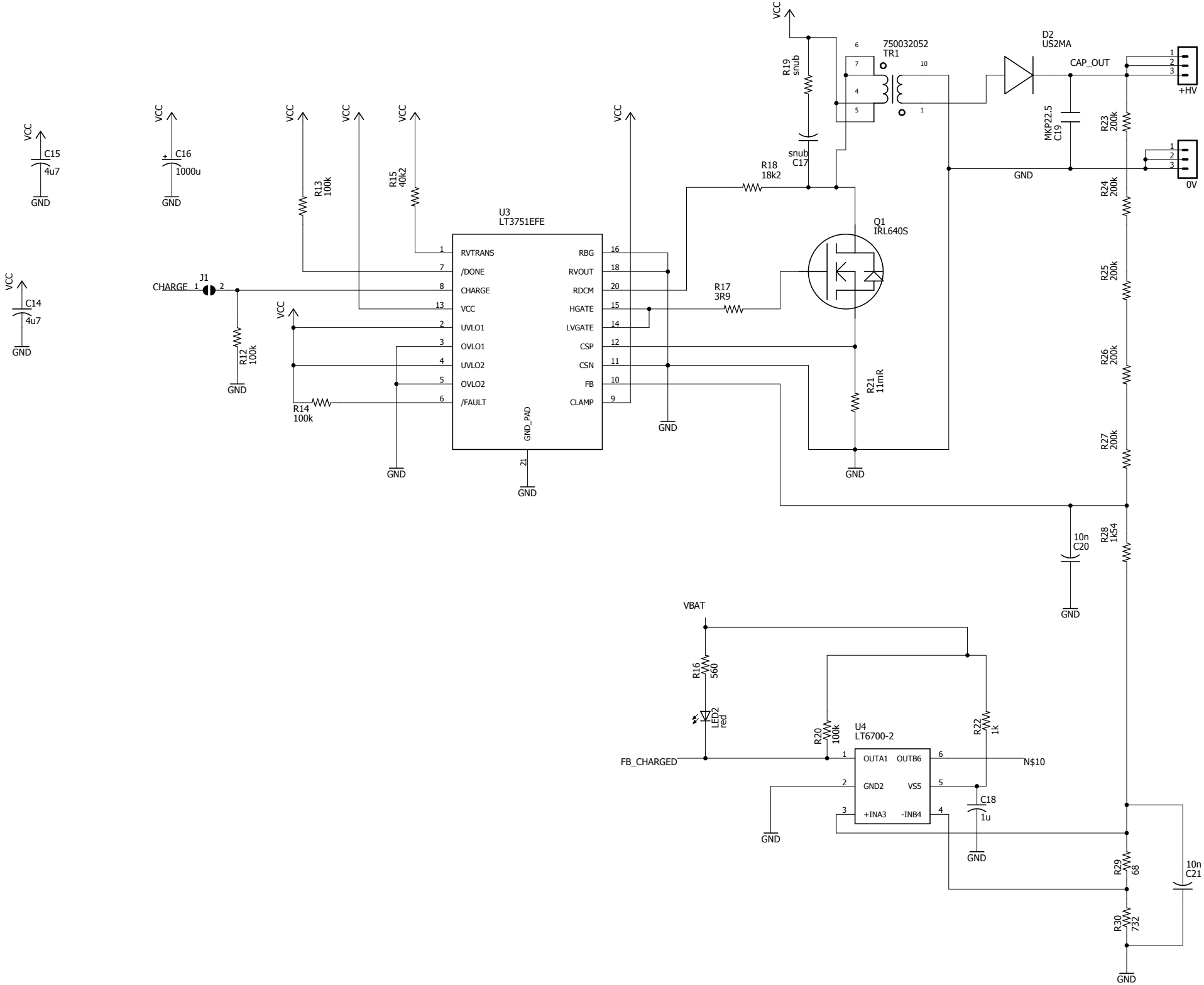
VCC
C15
4u7
GND
C16
1000u
R13
100k
R15
40k2
U3
LT3751EFE
RVTRANS
/DONE
CHARGE
VCC
UVLO1
OVLO1
UVLO2
OVLO2
/FAULT
GND_PAD
RBG
RVOUT
RDCM
HGATE
LVGATE
CSP
CSN
FB
CLAMP
J1
CHARGE
C14
4u7
R12
100k
R14
100k
R17
3R9
R18
18k2
R19
snub
snub
C17
750032052
TR1
Q1
IRL640S
R21
11mR
D2
US2MA
CAP_OUT
MKP22.5
C19
+HV
0V
R23
200k
R24
200k
R25
200k
R26
200k
R27
200k
R28
1k54
10n
C20
VBAT
R16
560
LED2
red
FB_CHARGED
R20
100k
U4
LT6700-2
OUTA1
OUTB6
GND2
VS5
+INA3
-INB4
R22
1k
N$10
C18
1u
R29
68
R30
732
10n
C21

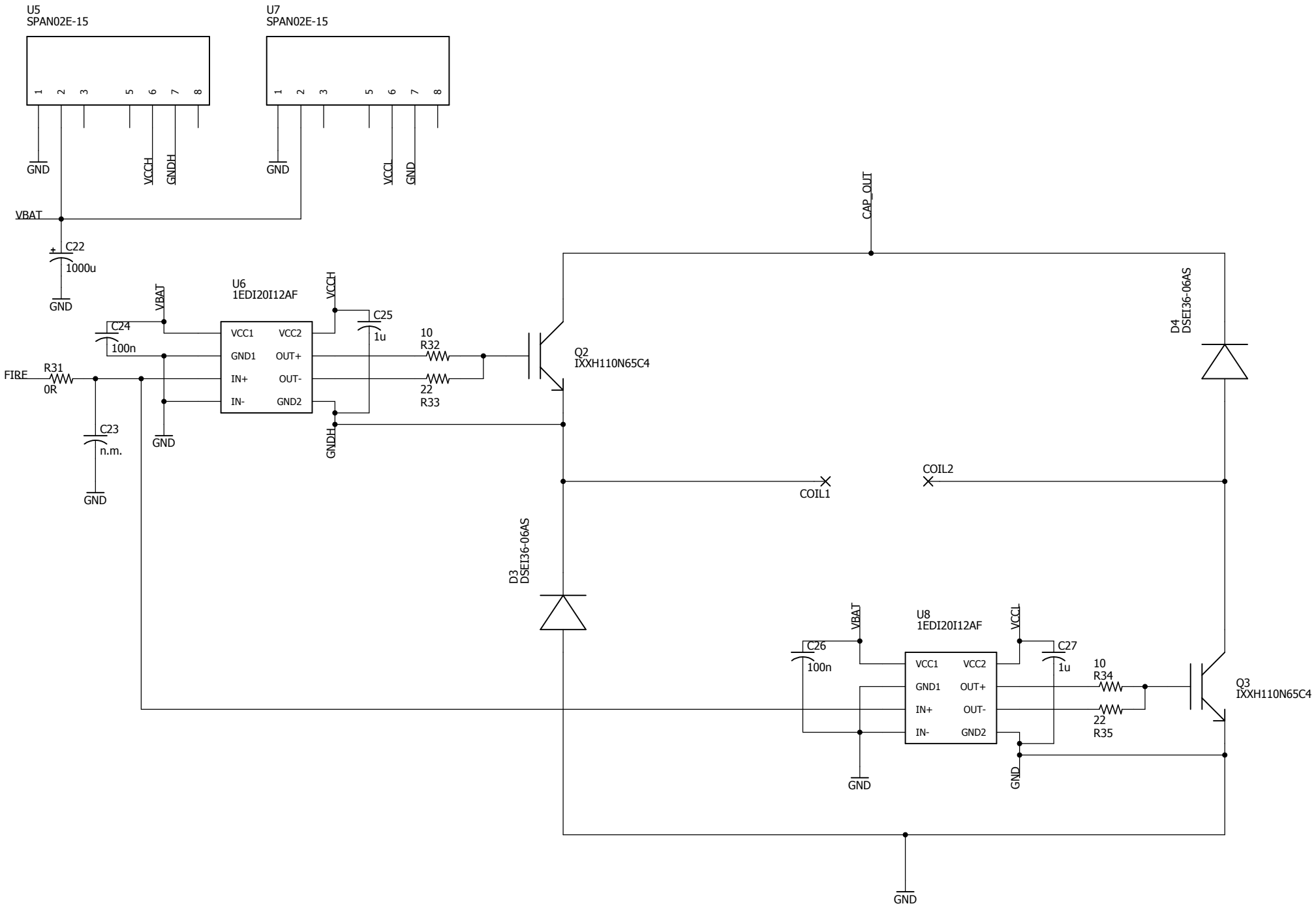
U5
SPAN02E-15
U7
SPAN02E-15
GND
VCCH
GNDH
VCCL
VBAT
C22
1000u
U6
1EDI20I12AF
C24
100n
C25
1u
R31
0R
FIRE
C23
n.m.
VCC1
VCC2
GND1
OUT+
IN+
OUT-
IN-
GND2
10
R32
22
R33
Q2
IXXH110N65C4
CAP_OUT
D4
DSEI36-06AS
COIL1
COIL2
D3
DSEI36-06AS
U8
1EDI20I12AF
C26
100n
C27
1u
10
R34
22
R35
Q3
IXXH110N65C4