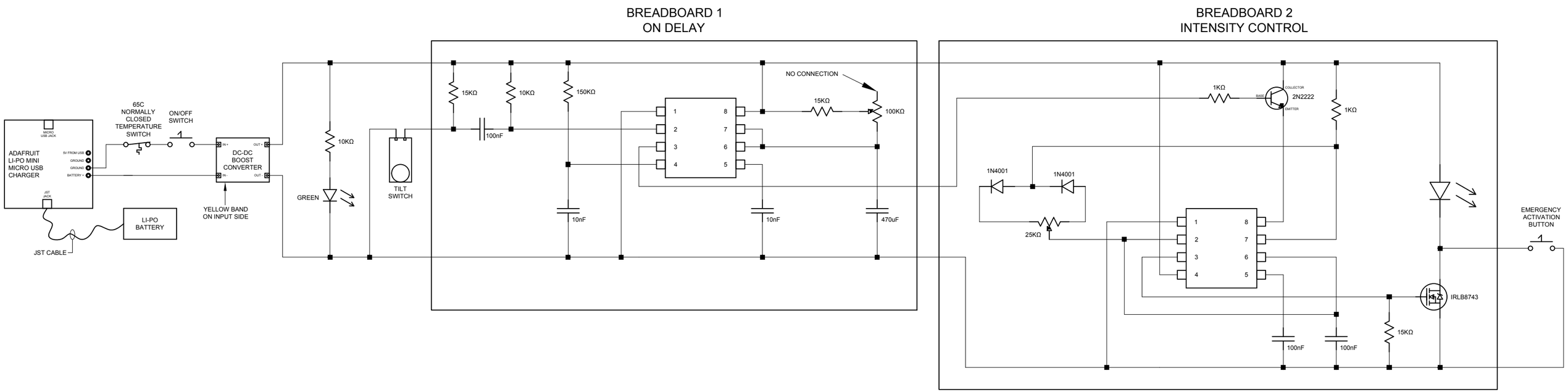
BREADBOARD 1
ON DELAY
BREADBOARD 2
INTENSITY CONTROL
ADAFRUIT
LI-PO MINI
MICRO USB
CHARGER
MICRO USB JACK
5V FROM USB
GROUND
GROUND
BATTERY +
JST JACK
JST CABLE
LI-PO BATTERY
65C NORMALLY CLOSED TEMPERATURE SWITCH
ON/OFF SWITCH
DC-DC BOOST CONVERTER
IN +
IN -
OUT +
OUT -
YELLOW BAND ON INPUT SIDE
10KΩ
GREEN
TILT SWITCH
15KΩ
10KΩ
150KΩ
100nF
10nF
10nF
470uF
NO CONNECTION
15KΩ
100KΩ
1KΩ
2N2222
COLLECTOR
BASE
EMITTER
1KΩ
1N4001
1N4001
25KΩ
IRLB8743
15KΩ
100nF
100nF
EMERGENCY ACTIVATION BUTTON