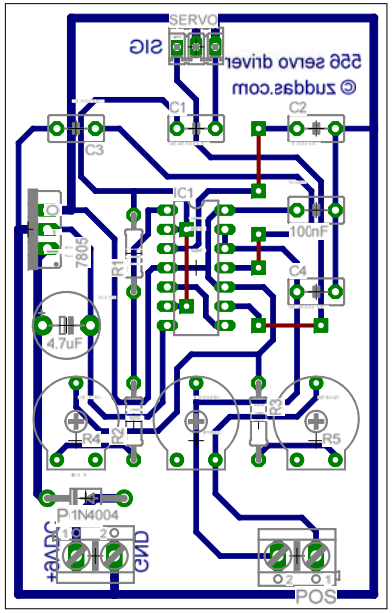
SERVO
SIG
556 servo driver
© zuddas.com
C1
C2
C3
IC1
100nF
C4
7805
R1
4.7uF
R4
R3
R2
R5
P 1N4004
+9ADC
GND
POS