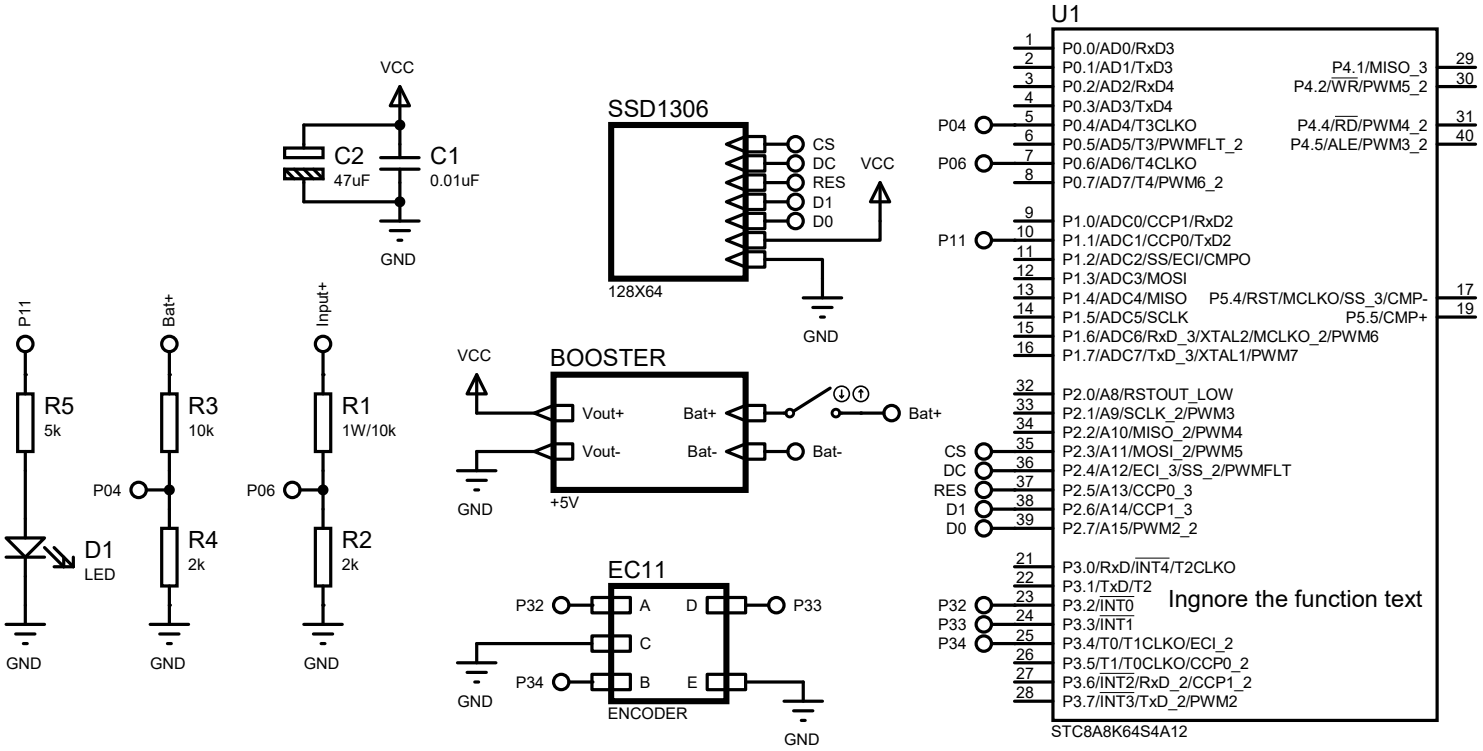
U1
P0.0/AD0/RxD3
P0.1/AD1/TxD3
P0.2/AD2/RxD4
P0.3/AD3/TxD4
P0.4/AD4/T3CLKO
P0.5/AD5/T3/PWMFLT_2
P0.6/AD6/T4CLKO
P0.7/AD7/T4/PWM6_2
P1.0/ADC0/CCP1/RxD2
P1.1/ADC1/CCP0/TxD2
P1.2/ADC2/SS/ECI/CMPO
P1.3/ADC3/MOSI
P1.4/ADC4/MISO
P1.5/ADC5/SCLK
P1.6/ADC6/RxD_3/XTAL2/MCLKO_2/PWM6
P1.7/ADC7/TxD_3/XTAL1/PWM7
P2.0/A8/RSTOUT_LOW
P2.1/A9/SCLK_2/PWM3
P2.2/A10/MISO_2/PWM4
P2.3/A11/MOSI_2/PWM5
P2.4/A12/ECI_3/SS_2/PWMFLT
P2.5/A13/CCP0_3
P2.6/A14/CCP1_3
P2.7/A15/PWM2_2
P3.0/RxD/INT4/T2CLKO
P3.1/TxD/T2
P3.2/INT0
P3.3/INT1
P3.4/T0/T1CLKO/ECI_2
P3.5/T1/T0CLKO/CCP0_2
P3.6/INT2/RxD_2/CCP1_2
P3.7/INT3/TxD_2/PWM2
P4.1/MISO_3
P4.2/WR/PWM5_2
P4.4/RD/PWM4_2
P4.5/ALE/PWM3_2
P5.4/RST/MCLKO/SS_3/CMP-
P5.5/CMP+
Ingnore the function text
STC8A8K64S4A12
P04
P06
P11
CS
DC
RES
D1
D0
P32
P33
P34
VCC
C2
47uF
C1
0.01uF
GND
SSD1306
128X64
BOOSTER
Vout+
Vout-
Bat+
Bat-
+5V
EC11
A
B
C
D
E
ENCODER
P11
R5
5k
D1
LED
Bat+
R3
10k
R4
2k
Input+
R1
1W/10k
R2
2k