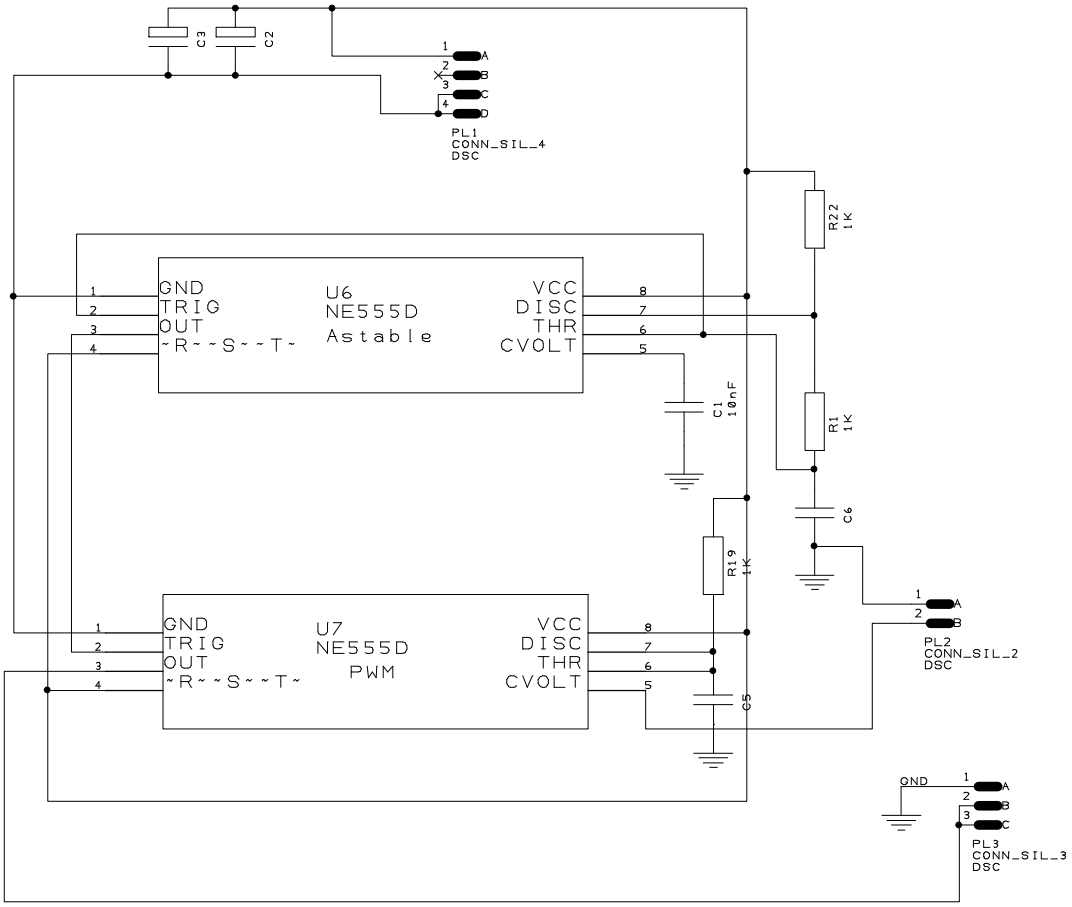
C3
C2
PL1
CONN_SIL_4
DSC
R22
1K
U6
NE555D
Astable
GND
TRIG
OUT
~R~~S~~T~
VCC
DISC
THR
CVOLT
C1
10nF
R1
1K
C6
R19
1K
U7
NE555D
PWM
C5
PL2
CONN_SIL_2
DSC
GND
PL3
CONN_SIL_3
DSC