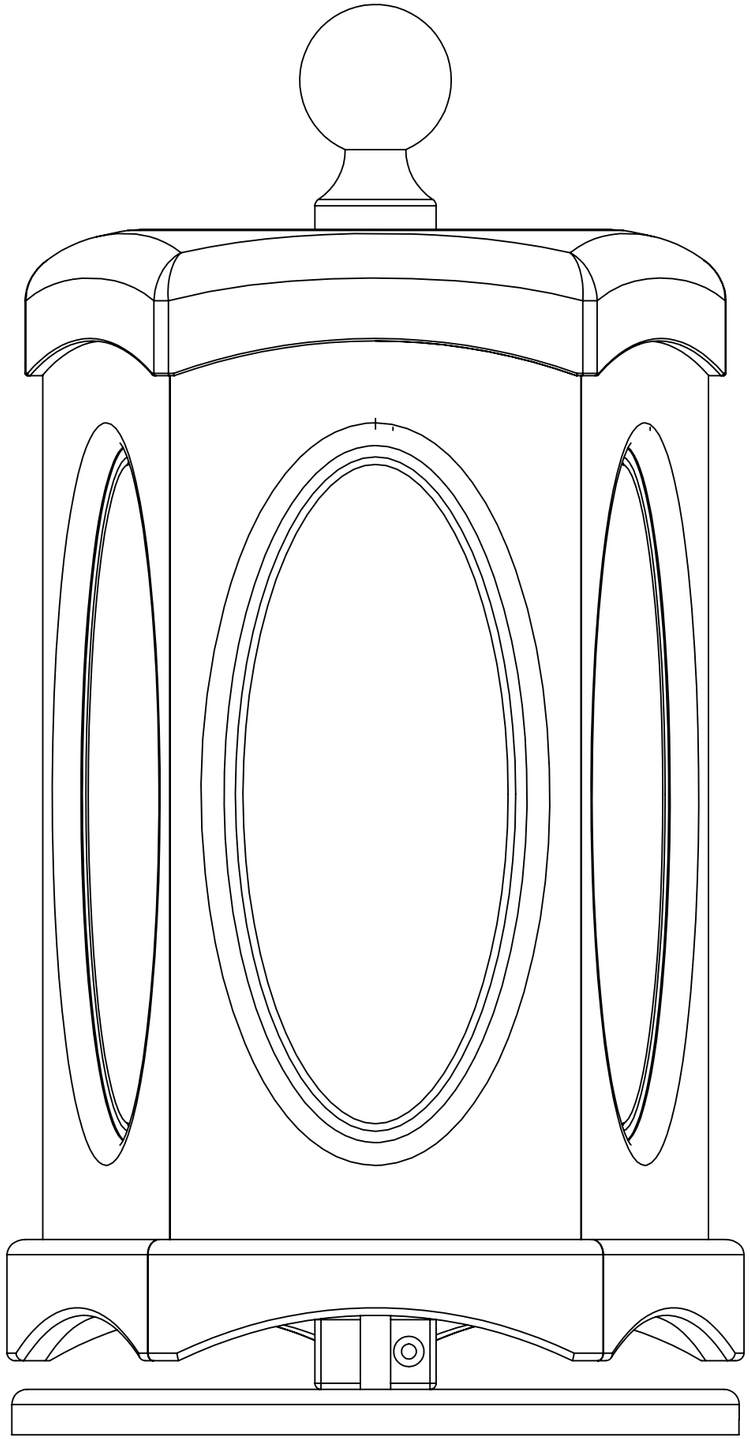

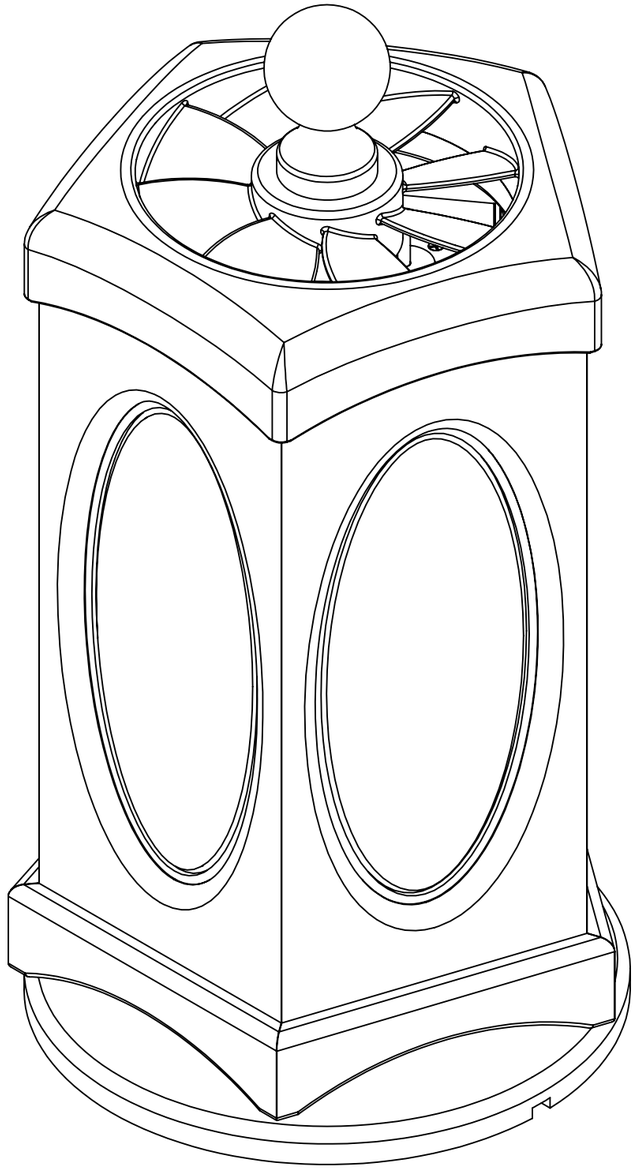

LAMP ASSEMBLY
SHEET 1 OF 5

LITHOPANE LAMP - BRITZ

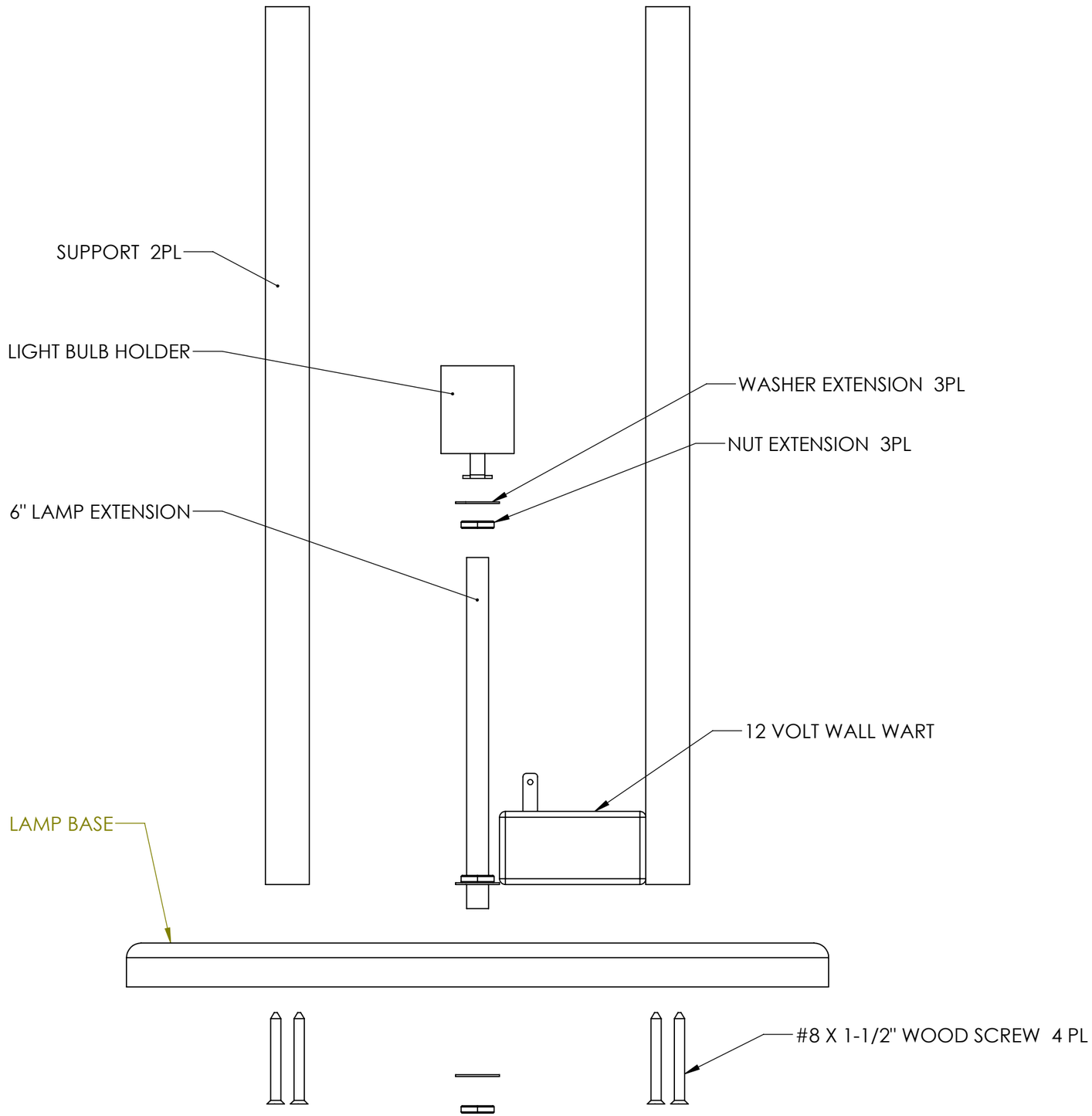

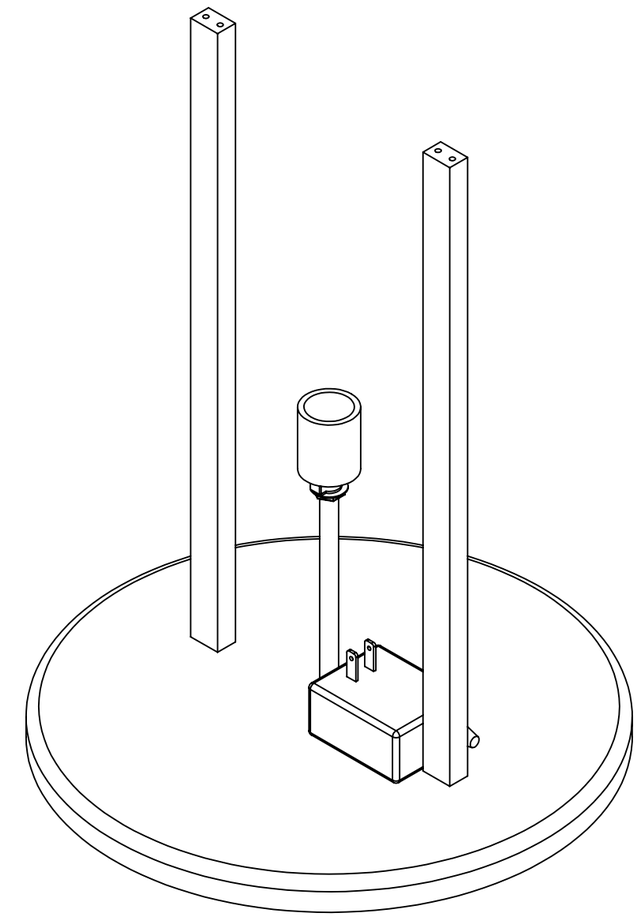

LAMP ASSEMBLY
SHEET 2 OF 5

LITHOPANE LAMP - BRITZ

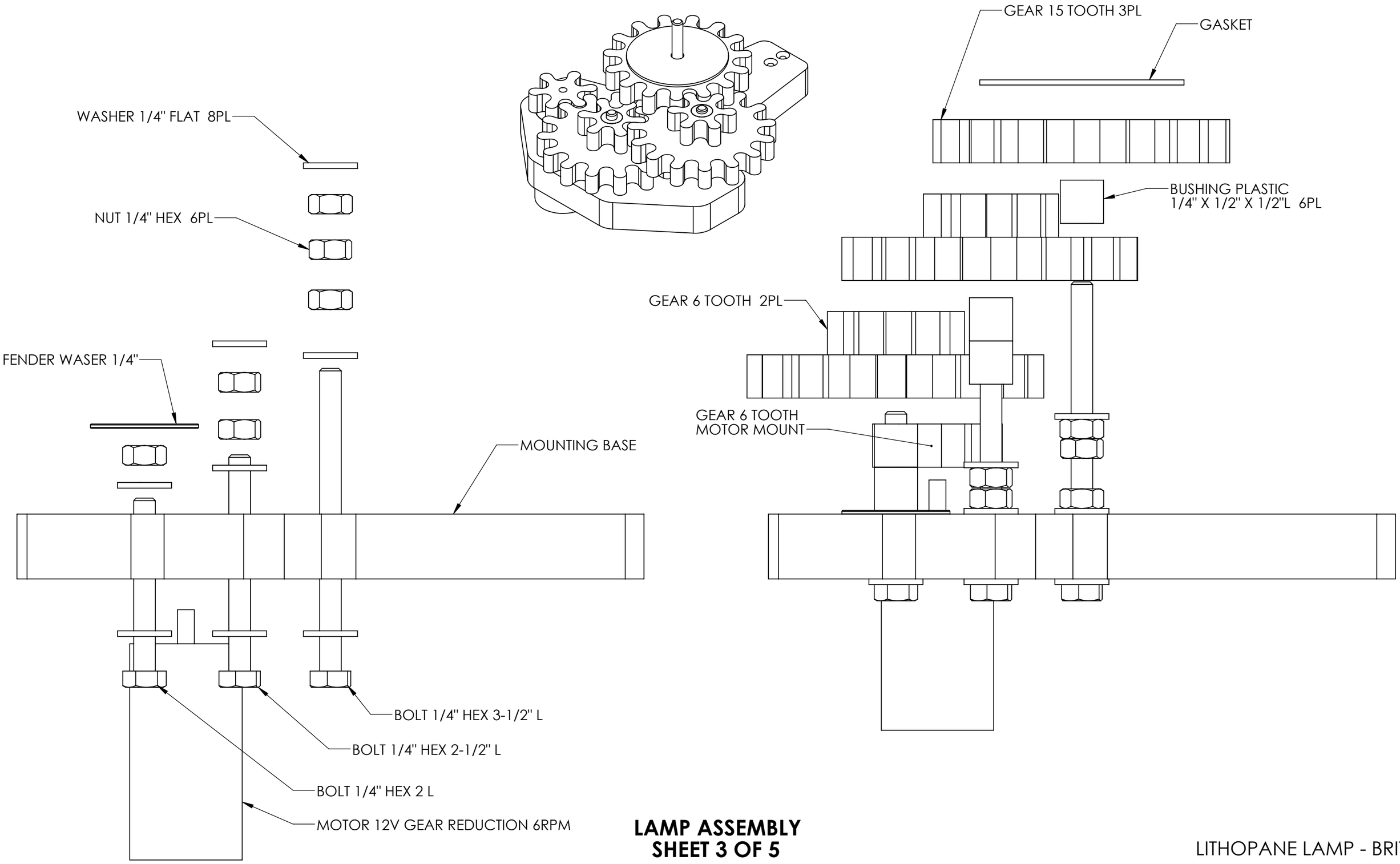

LAMP ASSEMBLY
SHEET 3 OF 5

LITHOPANE LAMP - BRITZ

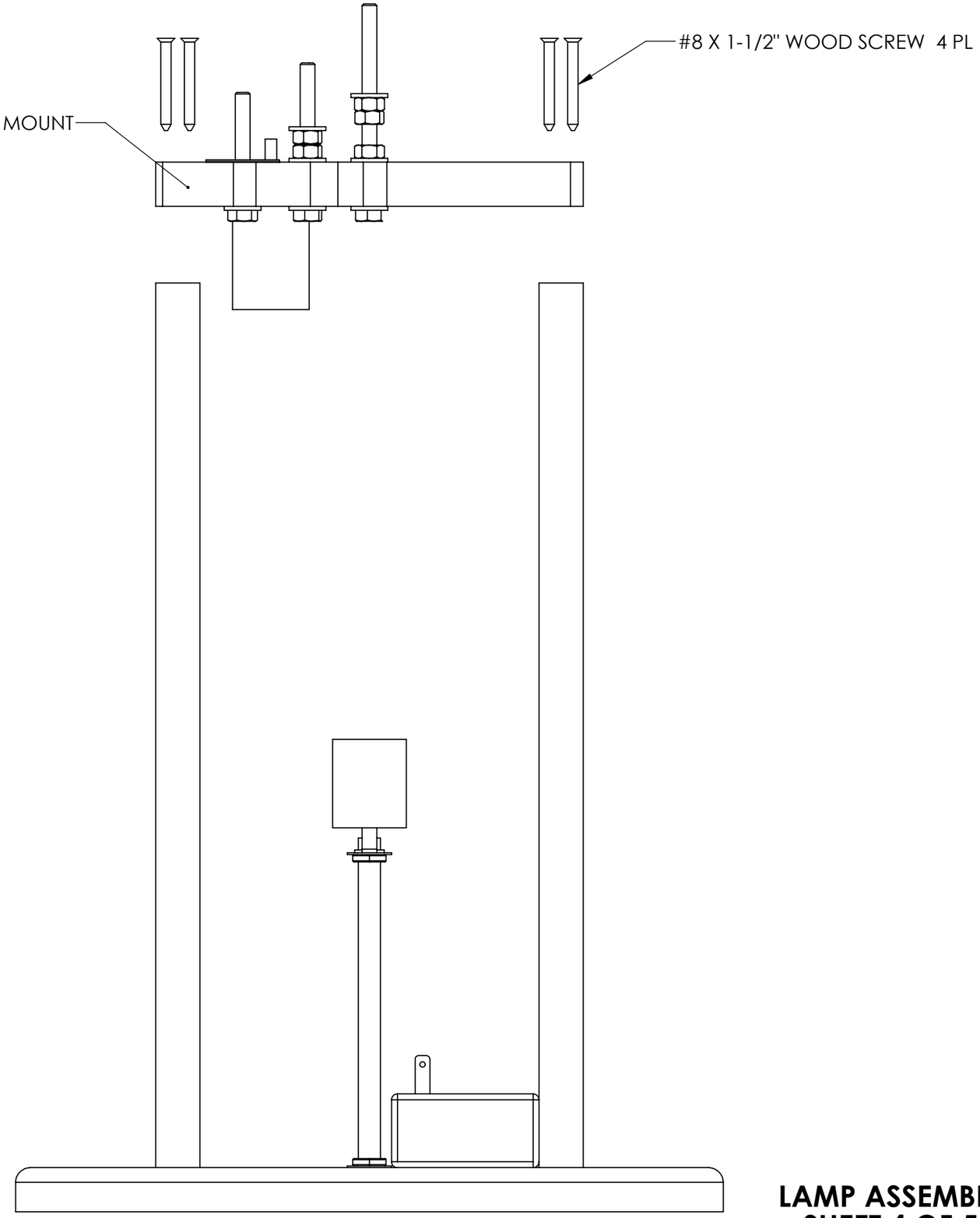

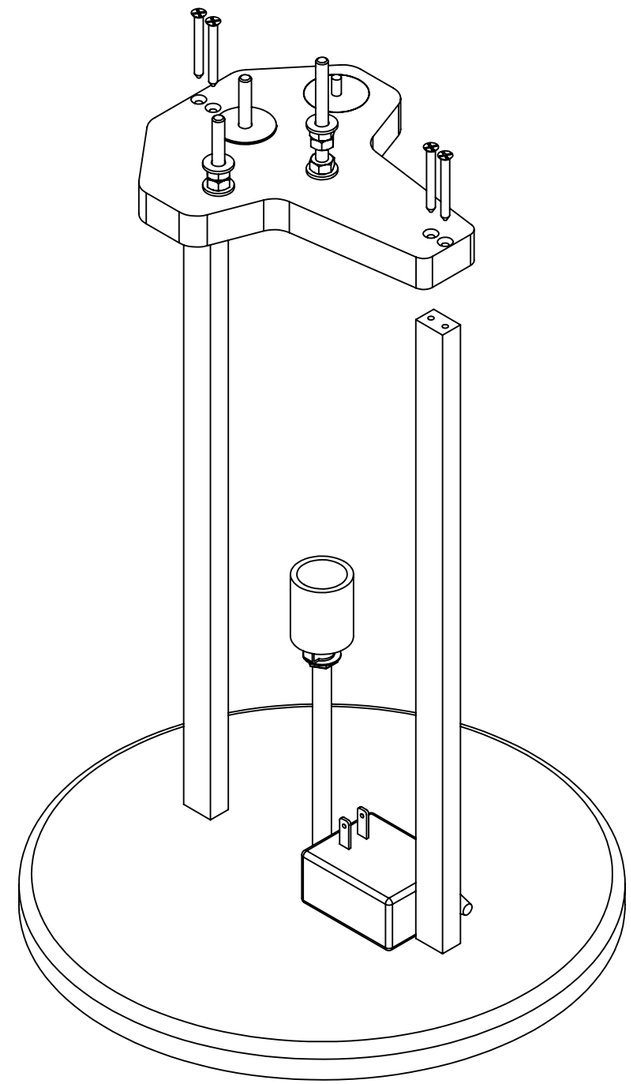

LAMP ASSEMBLY
SHEET 4 OF 5

LITHOPANE LAMP - BRITZ

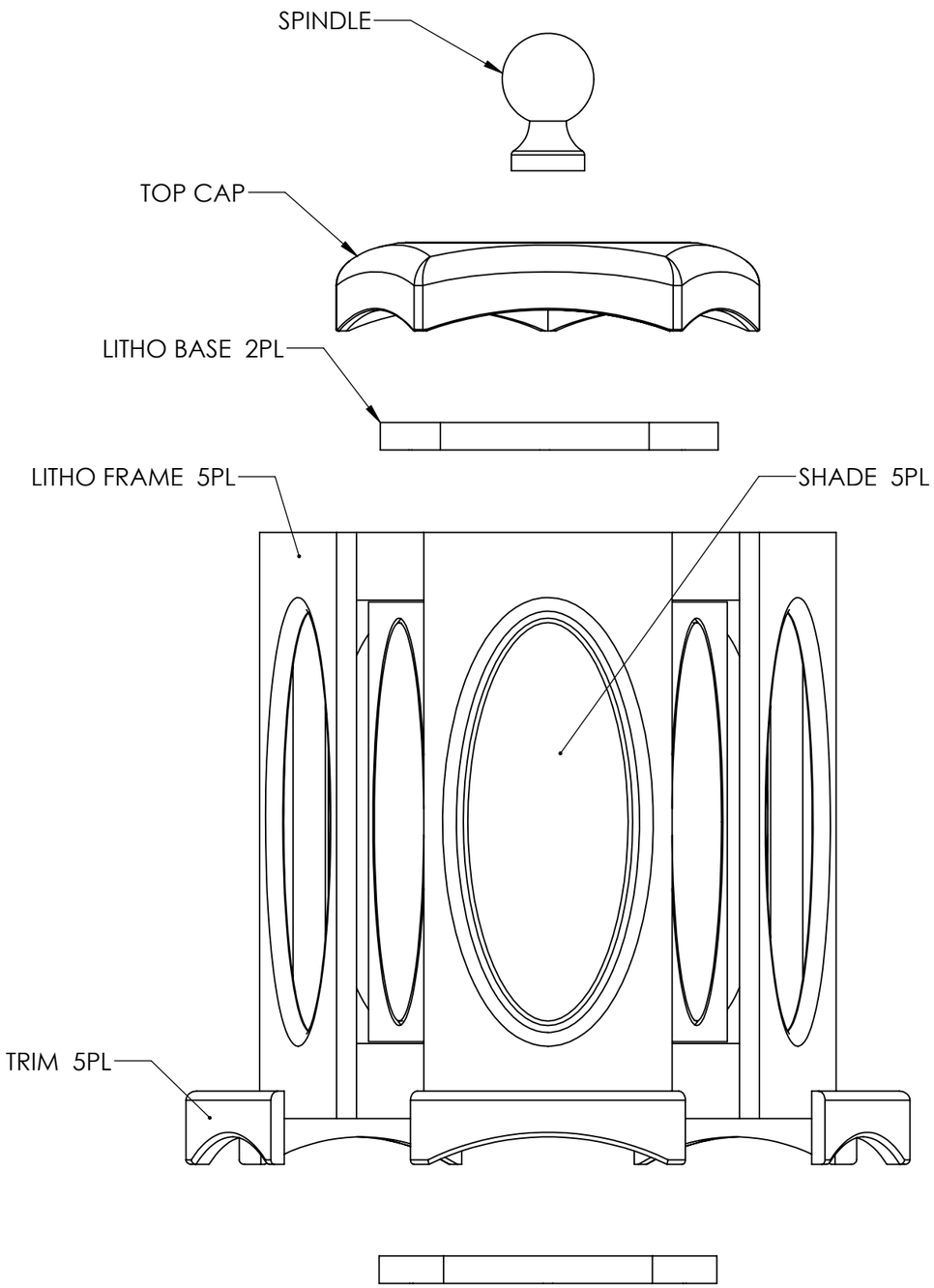

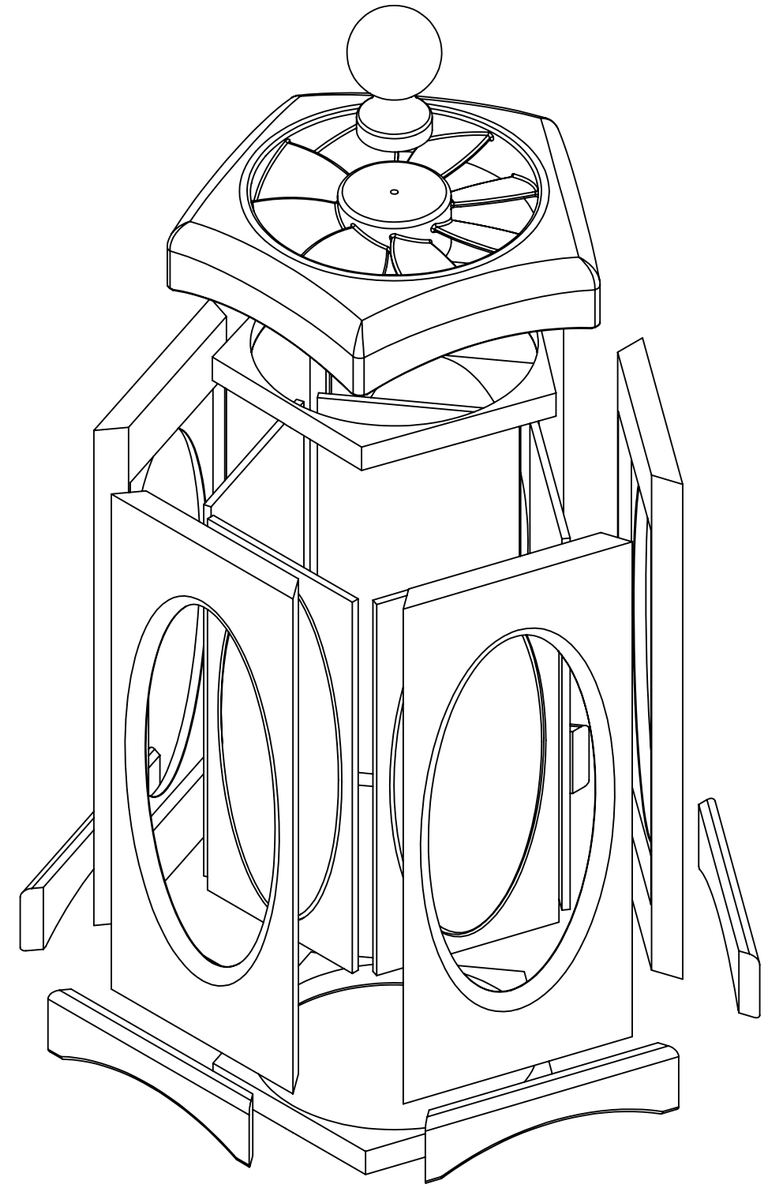

LAMP ASSEMBLY
SHEET 5 OF 5

LITHOPANE LAMP - BRITZ