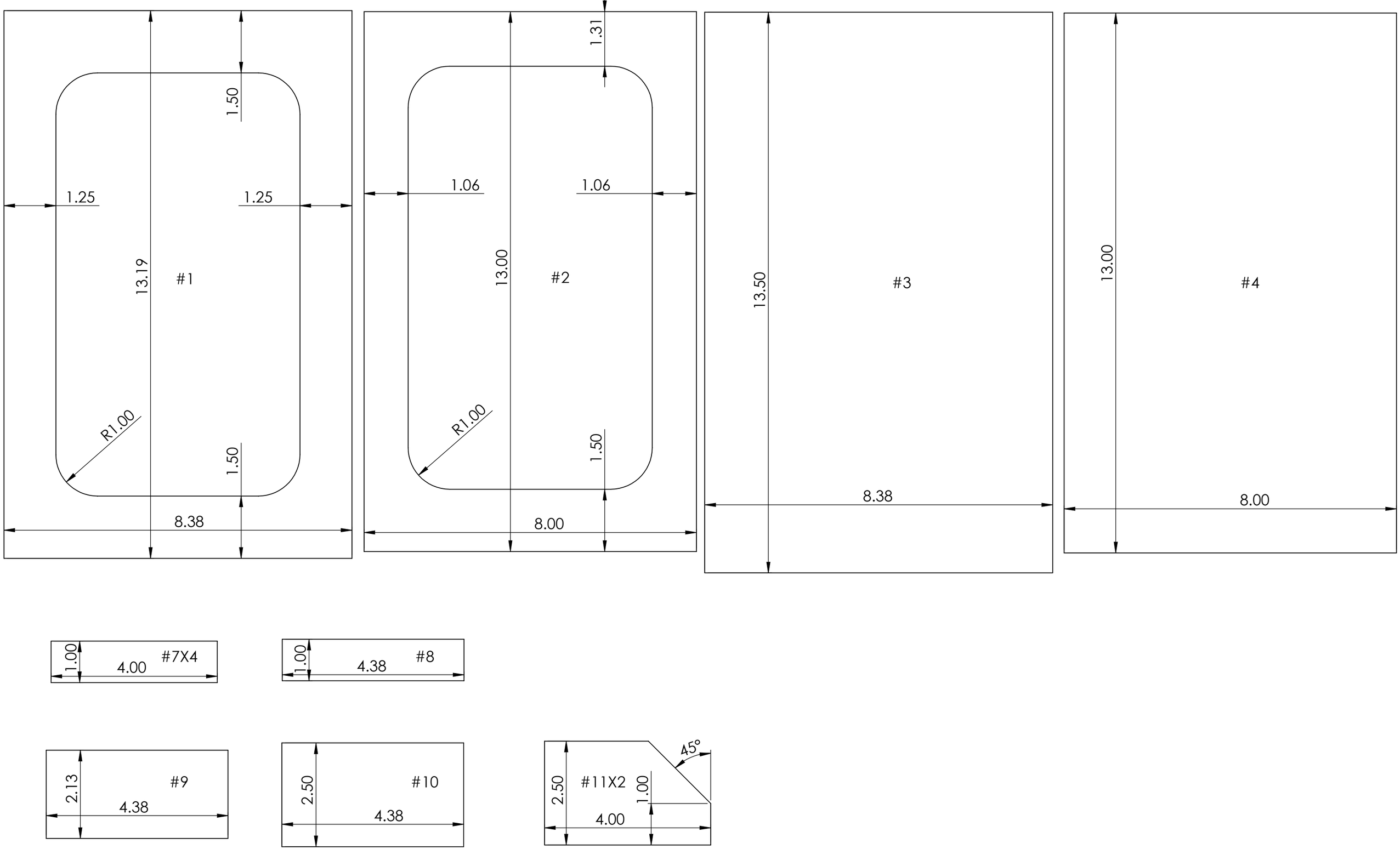

ALL DIMENSIONS IN INCHES
DESIGN BY: smuengr08
instructables.com/member/smuengr08/

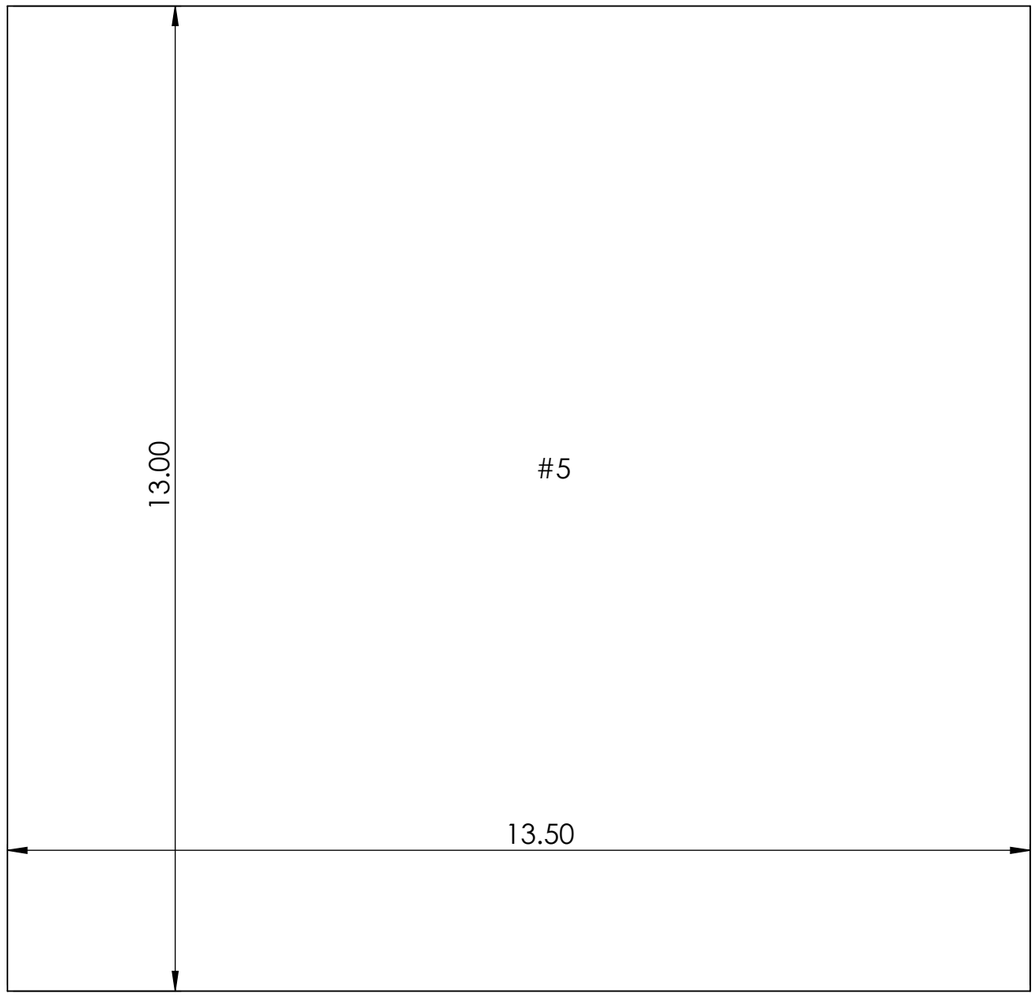

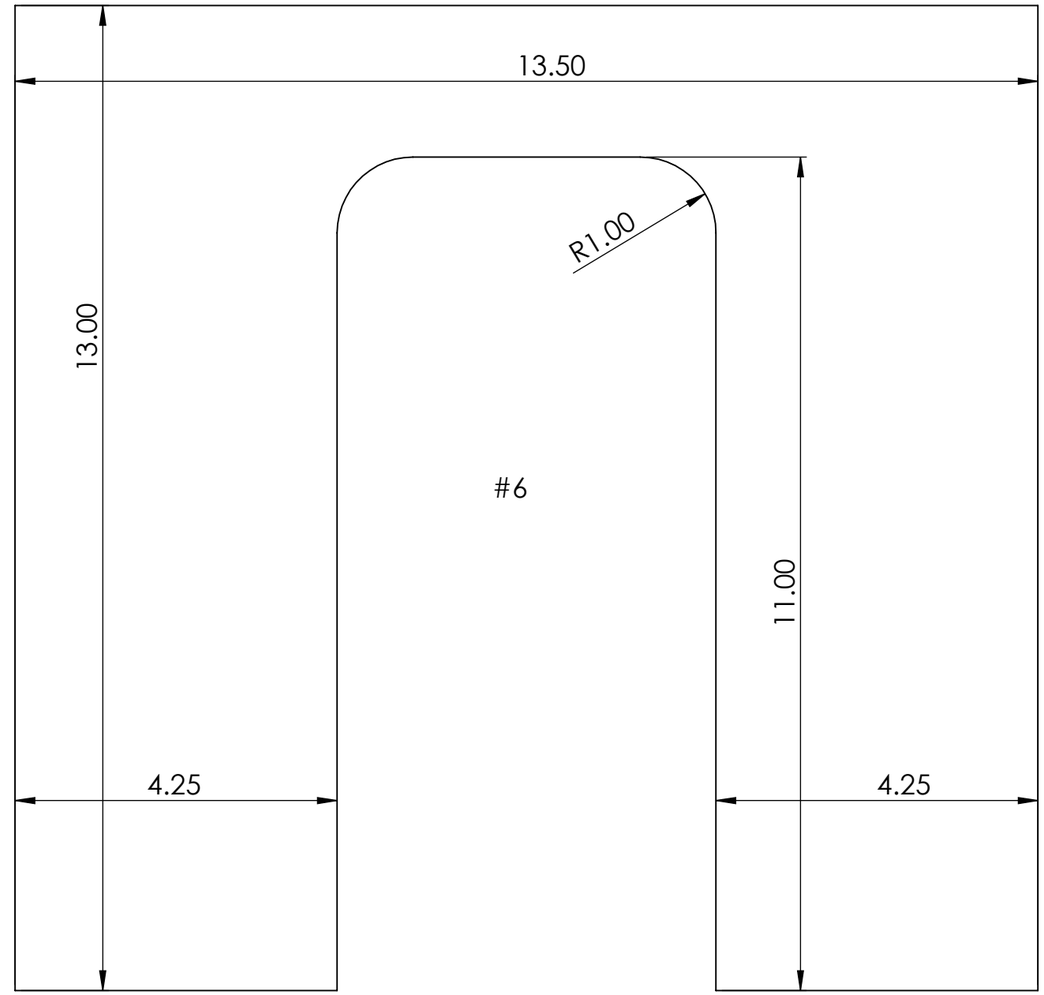

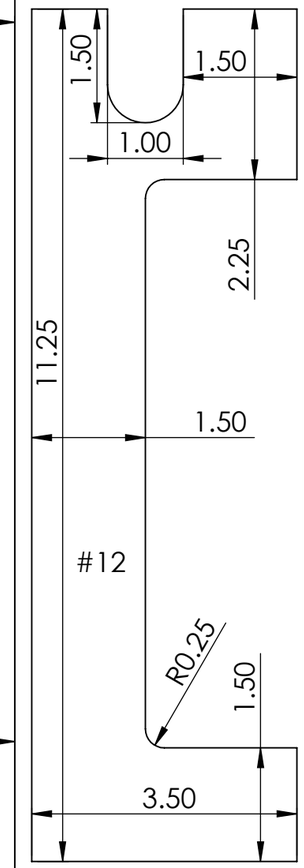

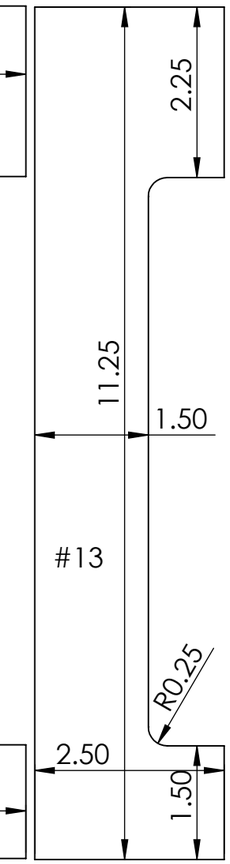

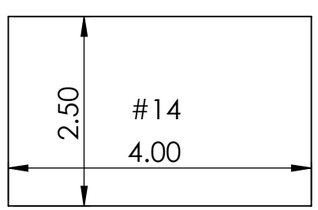

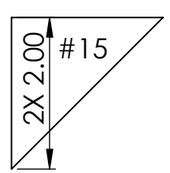

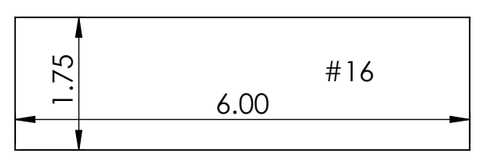

ALL DIMENSIONS IN INCHES
DESIGN BY: smuengr08
instructables.com/member/smuengr08/

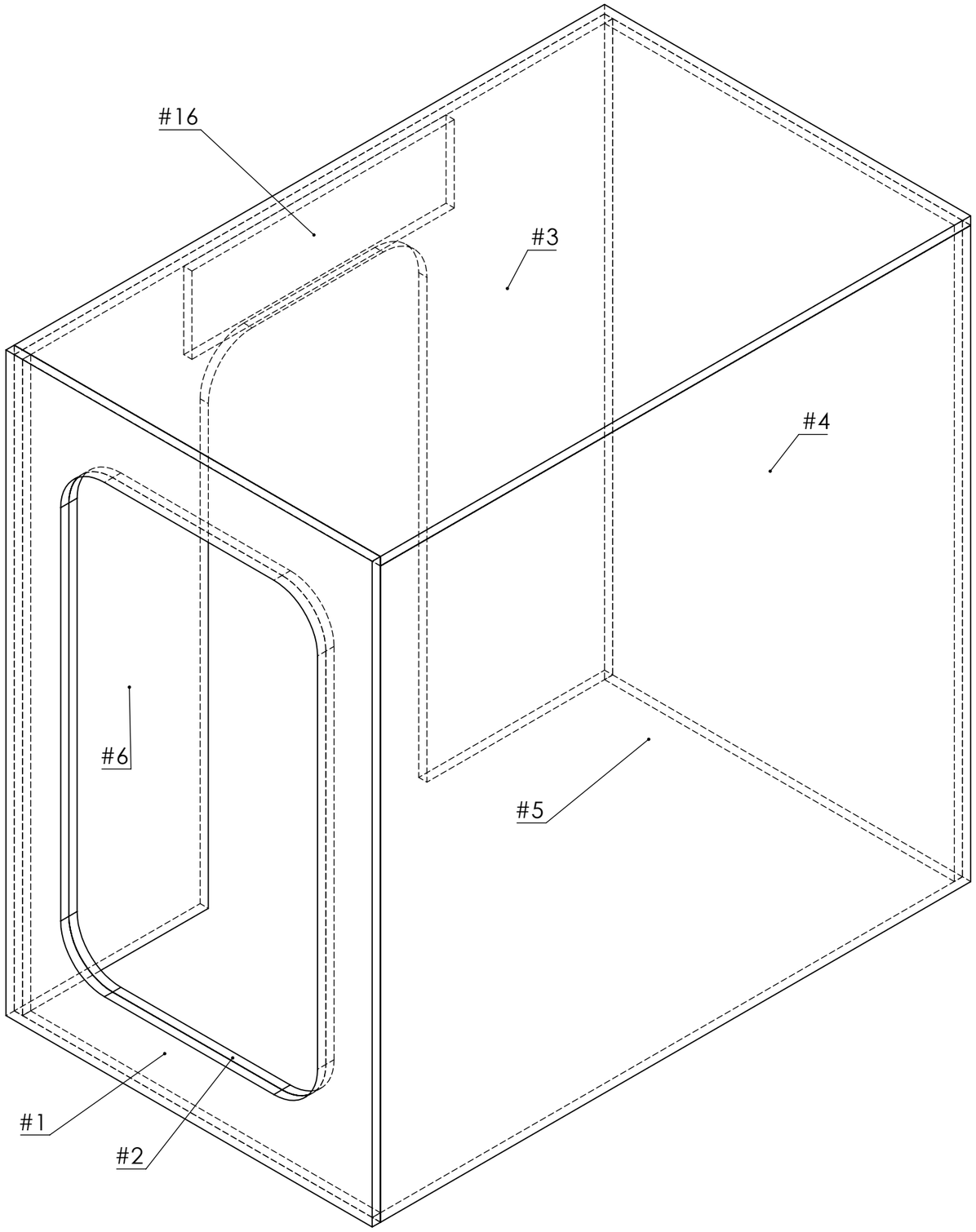

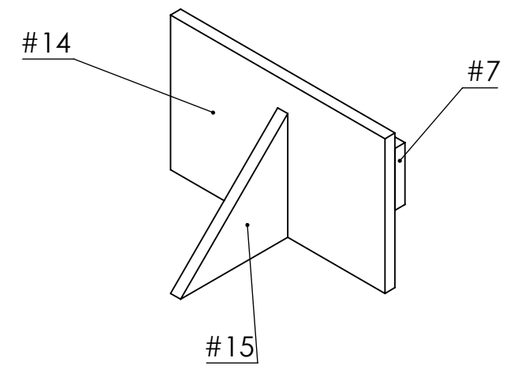

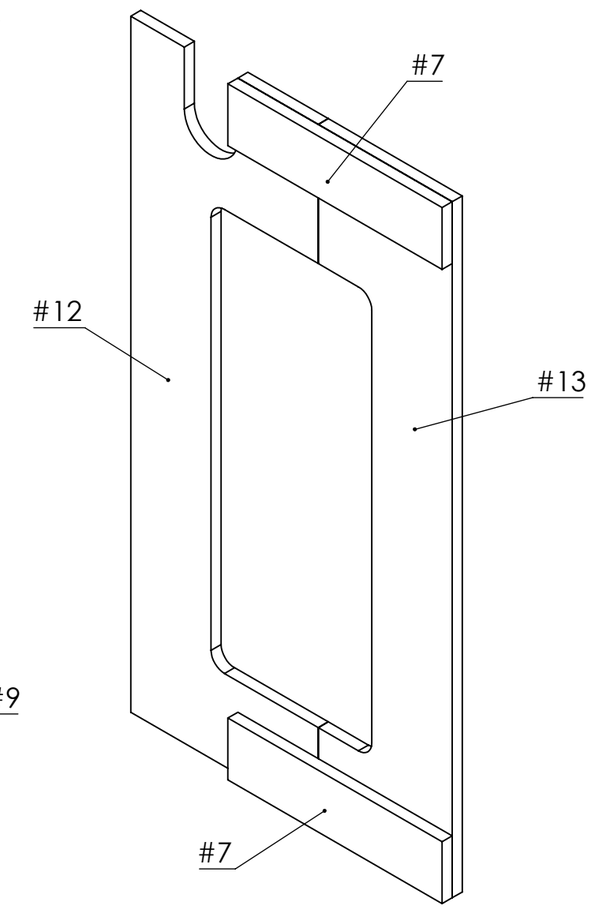

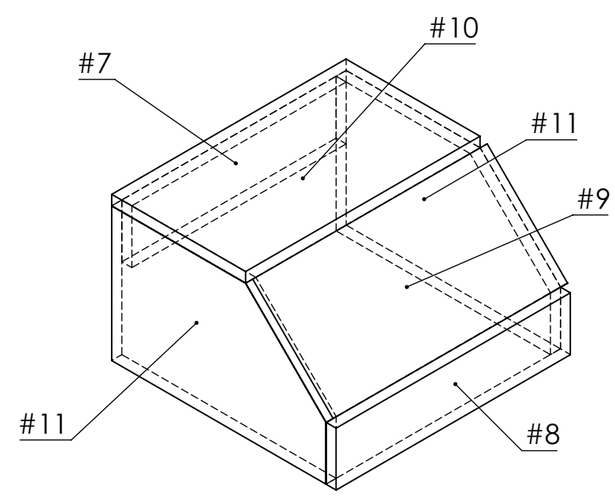

ALL DIMENSIONS IN INCHES
DESIGN BY: smuengr08
instructables.com/member/smuengr08/