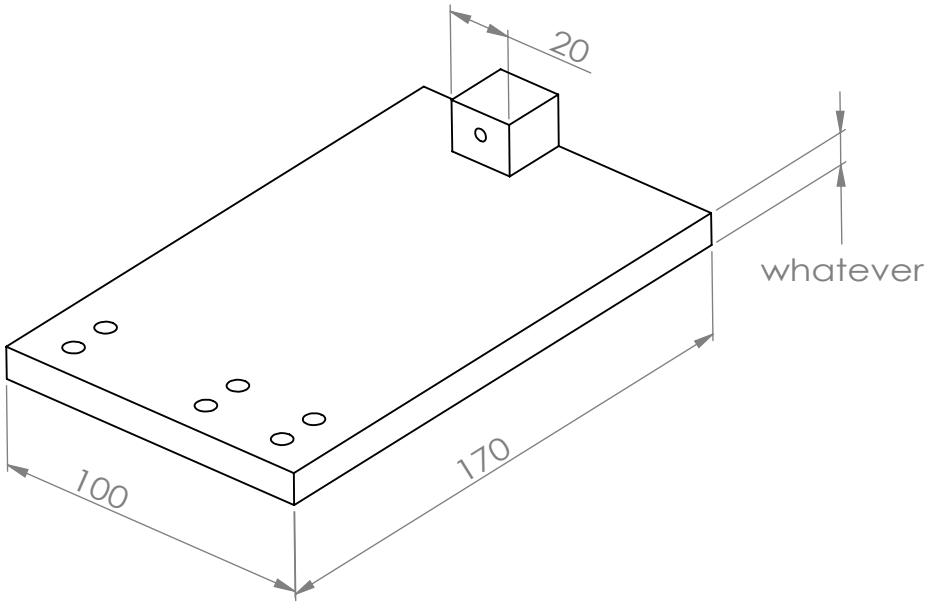
20
whatever
100
170

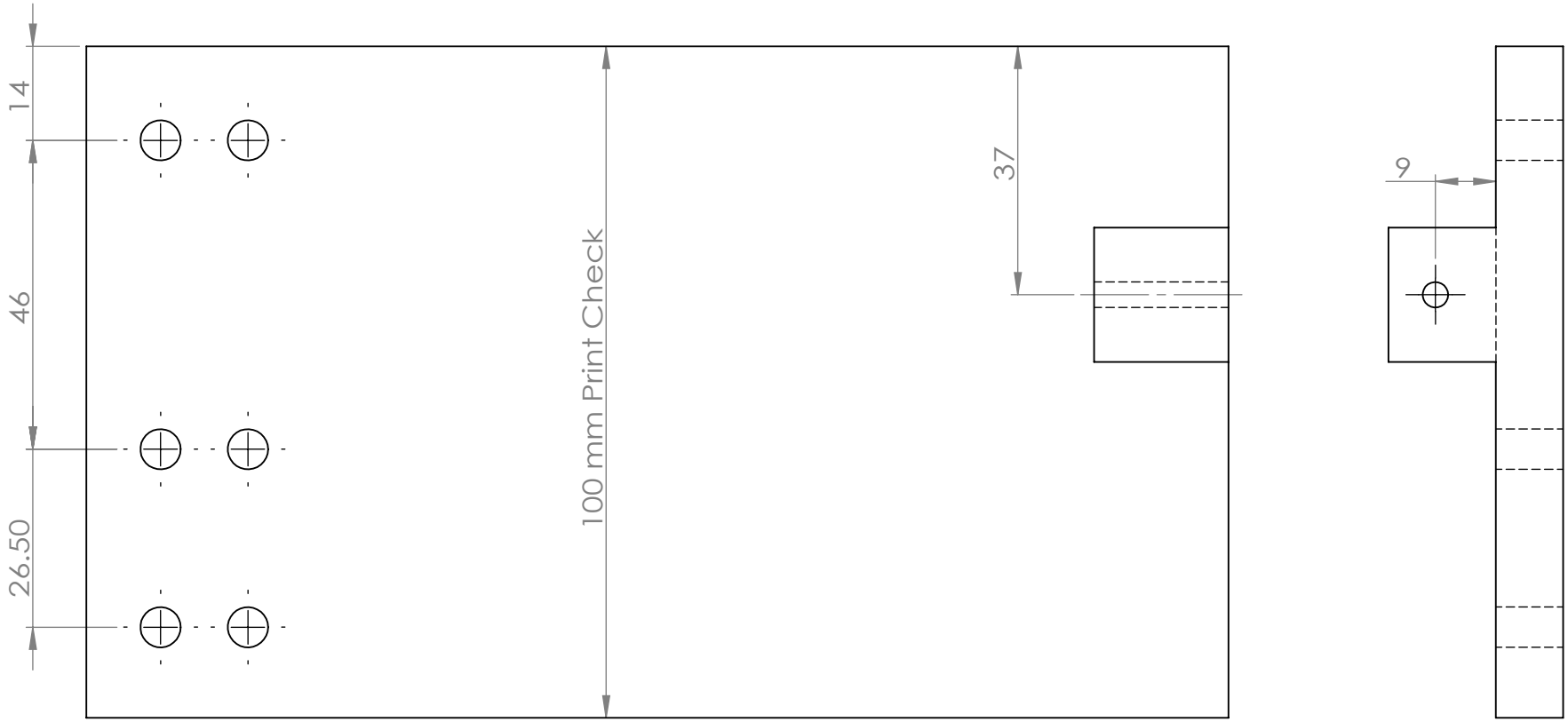
14
46
26.50
100 mm Print Check
37
9