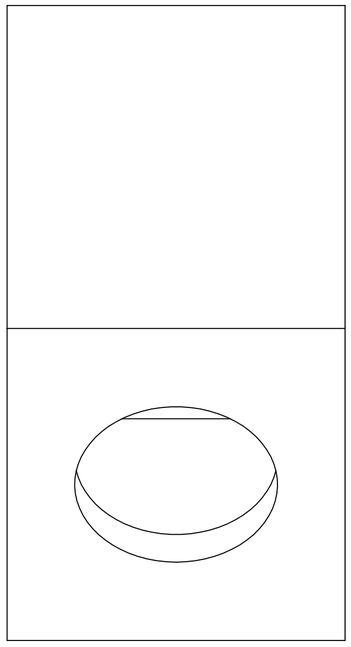

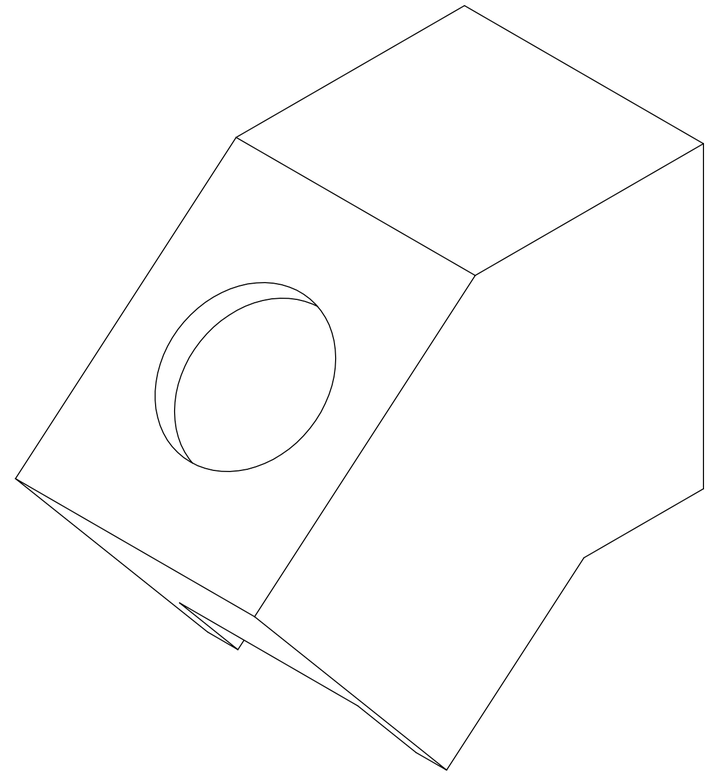

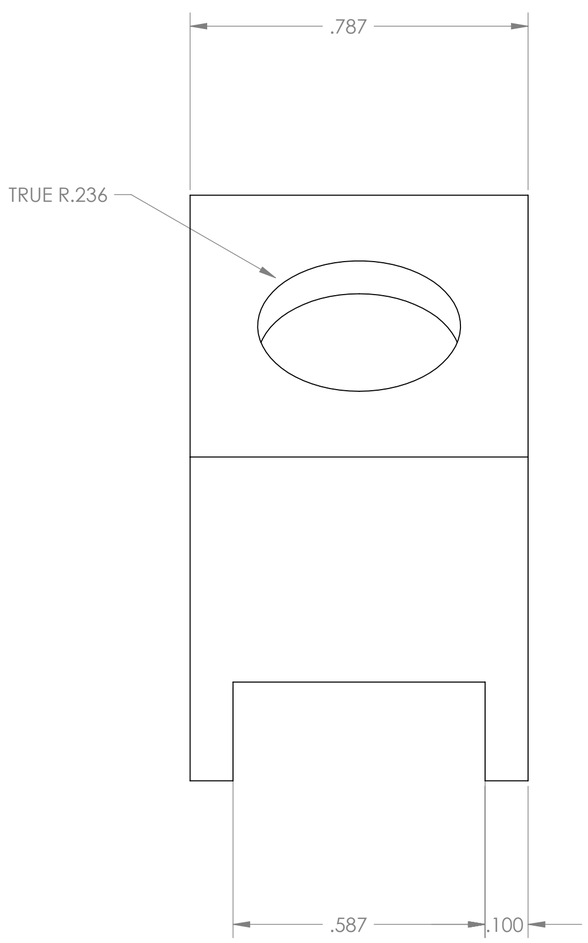
.787
TRUE R.236
.587
.100

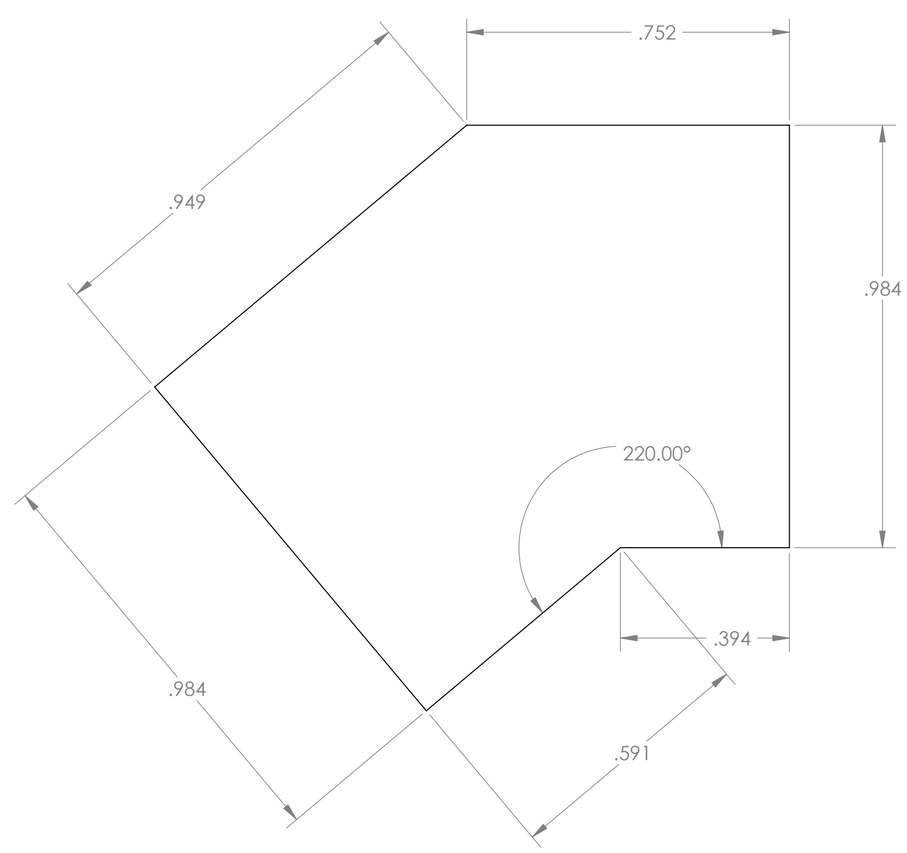
.752
.949
.984
220.00°
.394
.984
.591