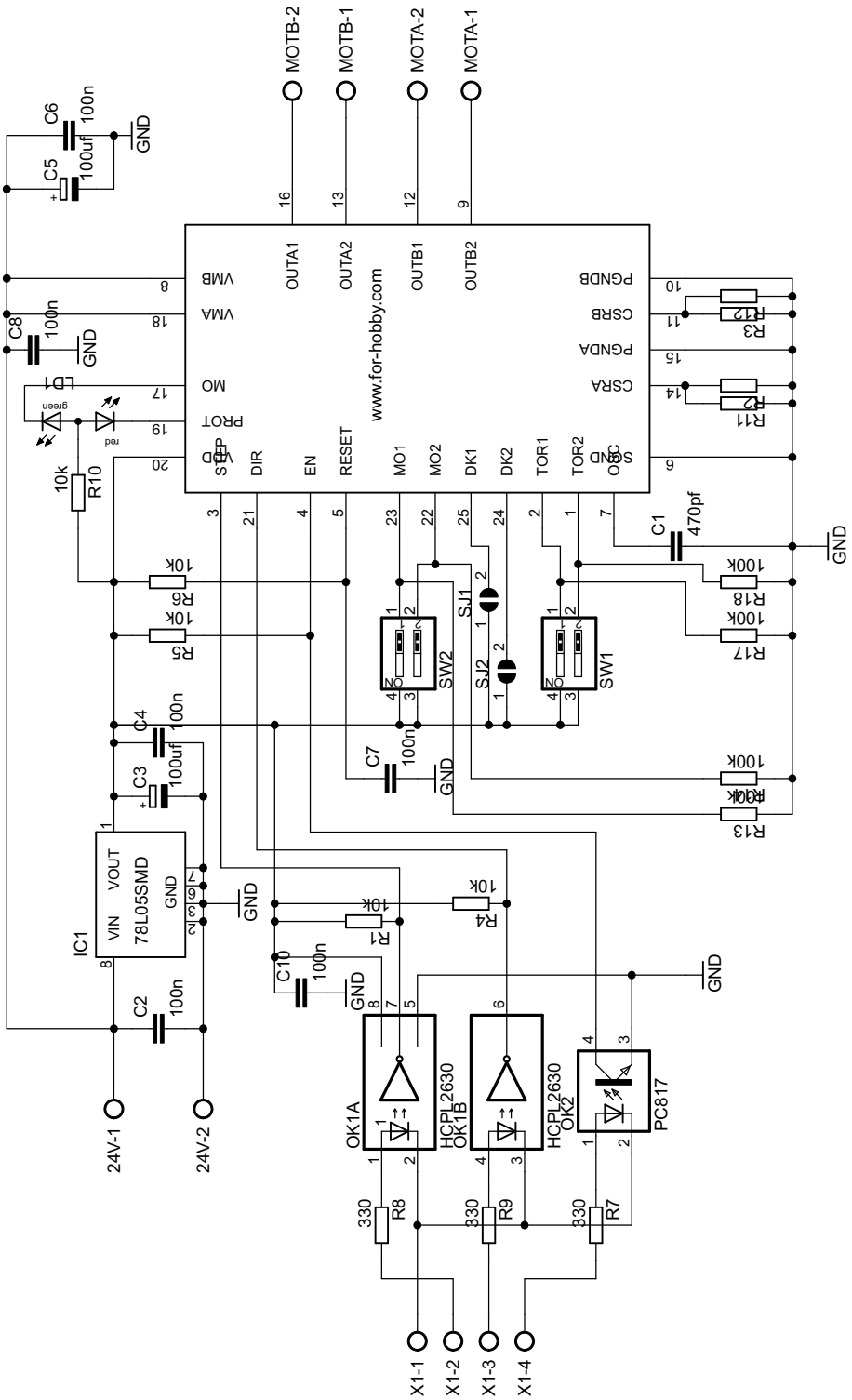

19.06.2010 08:45:43 D:\Misc\Facultate\Licenta\mecanism pozitionare\driver\cablaj DRV330_v1.3.sch (Sheet: 1/1)