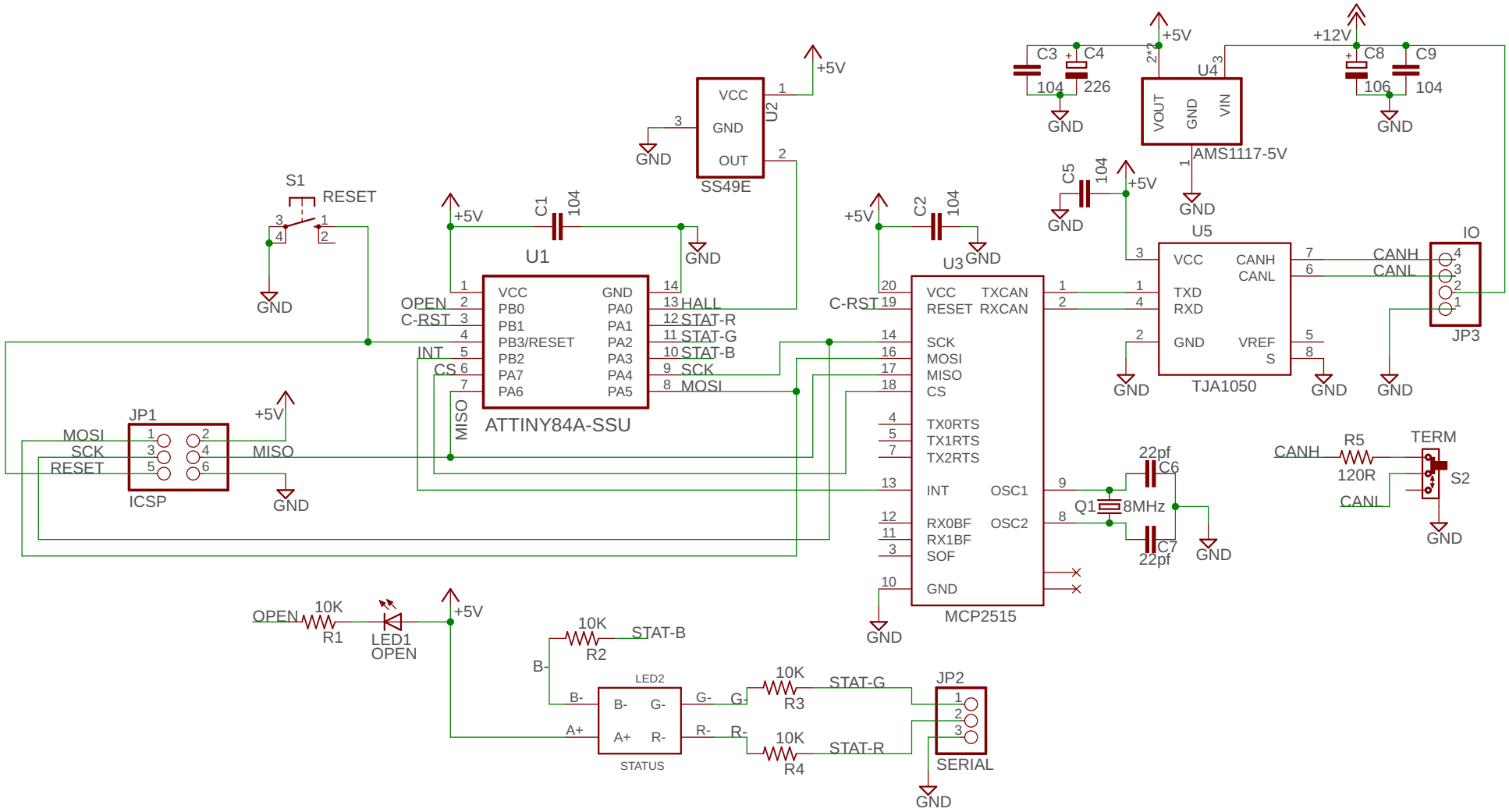
S1
RESET
GND
+5V
C1
104
U1
VCC
PB0
PB1
PB3/RESET
PB2
PA7
PA6
GND
PA0
PA1
PA2
PA3
PA4
PA5
OPEN
C-RST
INT
CS
MISO
HALL
STAT-R
STAT-G
STAT-B
SCK
MOSI
ATTINY84A-SSU
JP1
MOSI
SCK
RESET
MISO
ICSP
VCC
GND
OUT
U2
SS49E
C2
104
U3
C-RST
VCC
RESET
TXCAN
RXCAN
SCK
MOSI
MISO
CS
TX0RTS
TX1RTS
TX2RTS
INT
OSC1
RX0BF
RX1BF
SOF
OSC2
GND
MCP2515
C3
104
C4
226
2*2
U4
3
VOUT
GND
VIN
AMS1117-5V
C8
106
C9
104
+12V
C5
104
U5
VCC
TXD
RXD
GND
CANH
CANL
VREF
S
TJA1050
IO
JP3
22pf
C6
Q1
8MHz
C7
22pf
CANH
R5
120R
CANL
TERM
S2
OPEN
10K
R1
LED1
OPEN
10K
R2
STAT-B
B-
LED2
B-
G-
A+
R-
STATUS
G-
R-
10K
R3
STAT-G
10K
R4
STAT-R
JP2
SERIAL