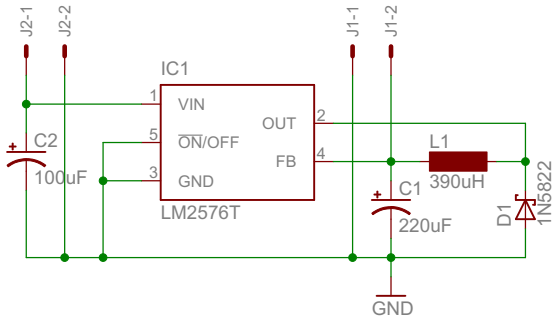
J2-1
J2-2
J1-1
J1-2
IC1
VIN
ON/OFF
GND
OUT
FB
1
5
3
2
4
LM2576T
C2
100uF
C1
220uF
L1
390uH
D1
1N5822
GND