Flasher.GBL, Scale(1.0X), Ruler(1=1.000 inch), 06/03/14@21:26:14

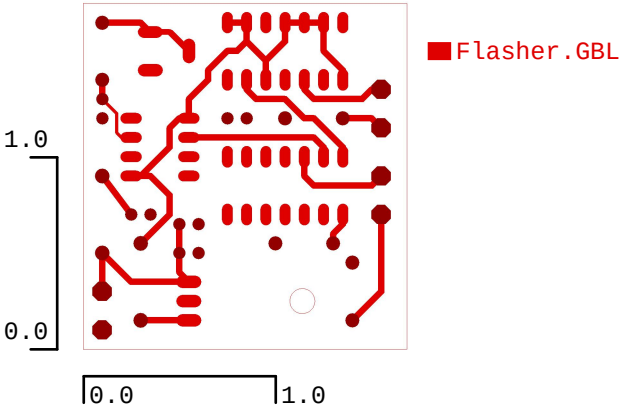

Flasher.GBO, Scale(1.0X), Ruler(1=1.000 inch), 06/03/14@21:26:14

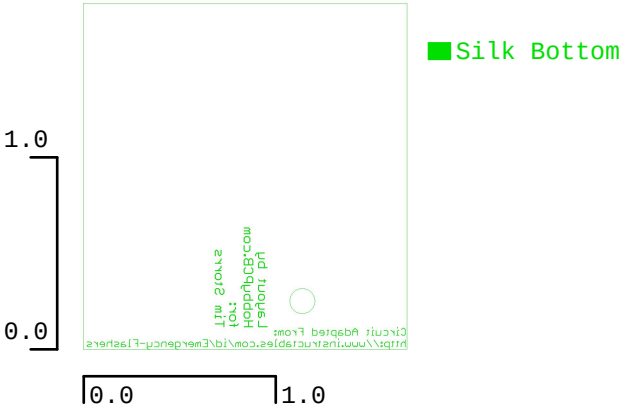

Flasher.GBS, Scale(1.0X), Ruler(1=1.000 inch), 06/03/14@21:26:15

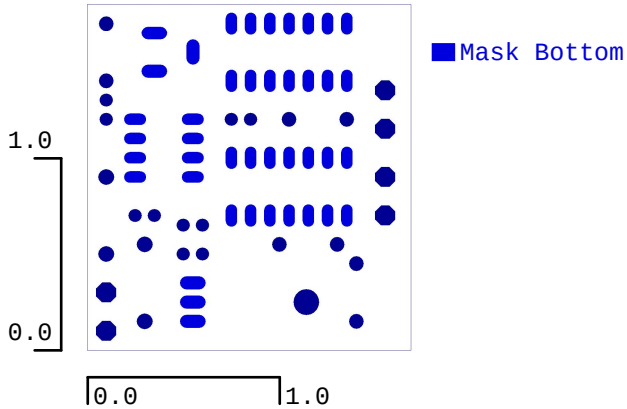

Flasher.GML, Scale(1.0X), Ruler(1=1.000 inch), 06/03/14@21:26:15

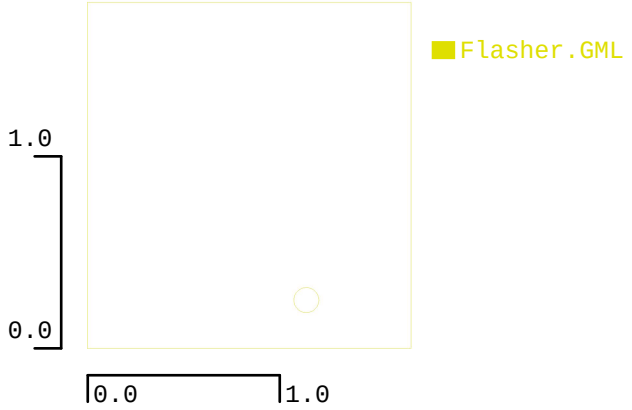

Flasher.GTL, Scale(1.0X), Ruler(1=1.000 inch), 06/03/14@21:26:15

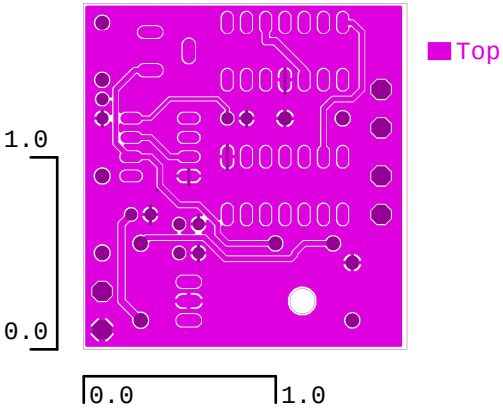

Flasher.GTO, Scale(1.0X), Ruler(1=1.000 inch), 06/03/14@21:26:15

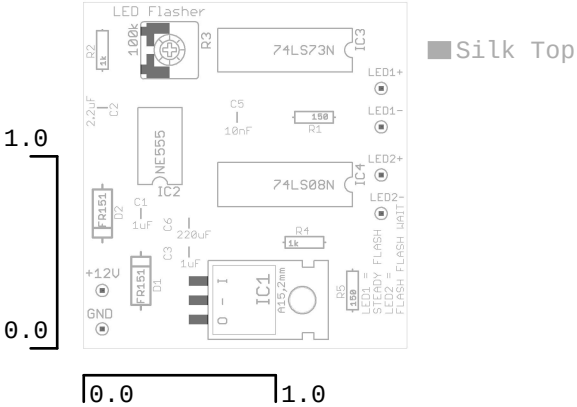

Silk Top

Flasher.GTS, Scale(1.0X), Ruler(1=1.000 inch), 06/03/14@21:26:15

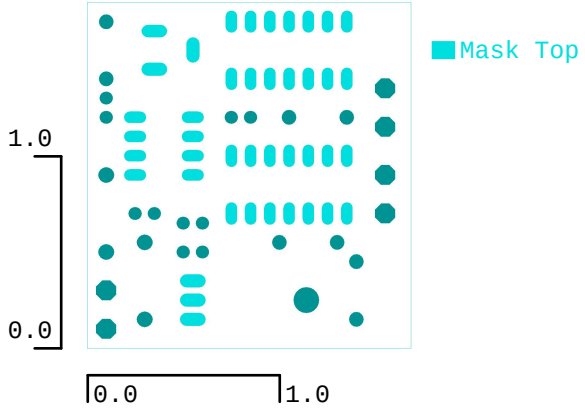
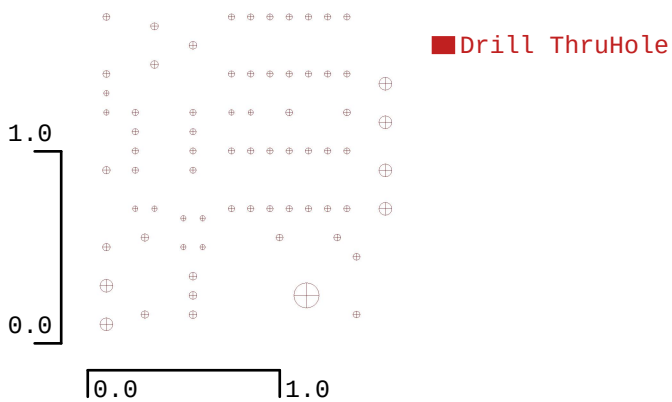
Flasher.TXT, Scale(1.0X), Ruler(1=1.000 inch), 06/03/14@21:26:15