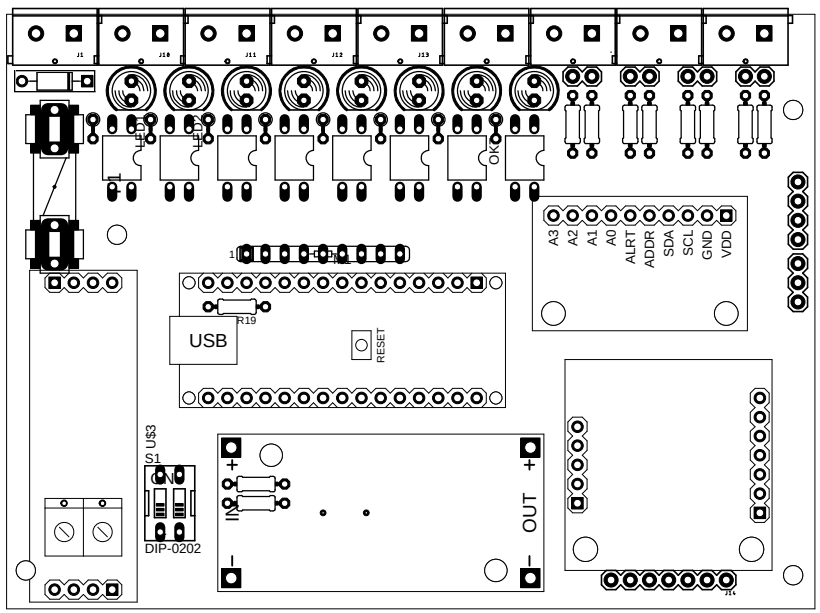
J1
J10
J11
J12
J13
LED
LED
OK
A3
A2
A1
A0
ALRT
ADDR
SDA
SCL
GND
VDD
R19
USB
RESET
U$3
S1
DIP-0202
IN
OUT