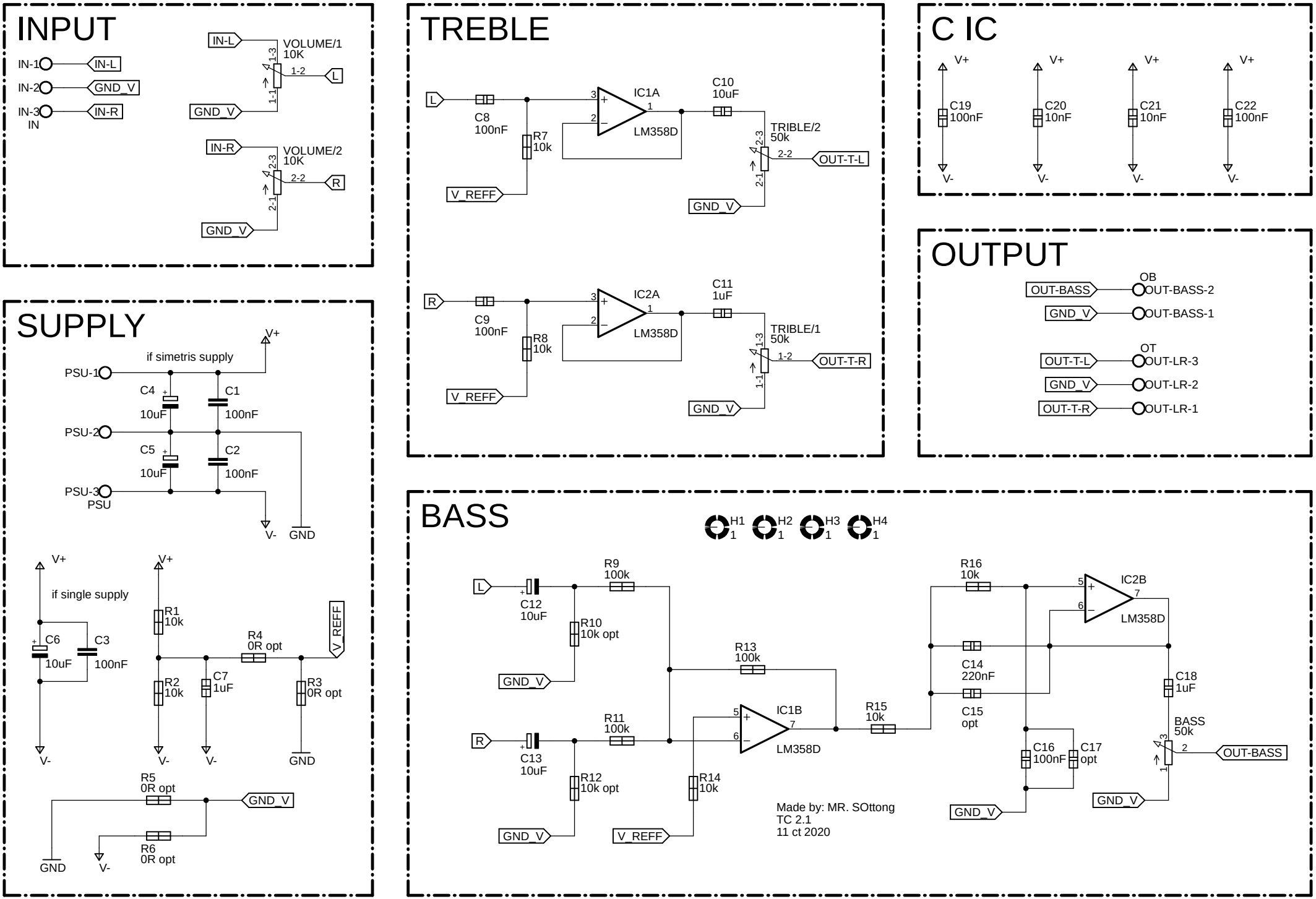
INPUT
IN-1
IN-2
IN-3
IN
IN-L
GND_V
IN-R
VOLUME/1
10K
1-3
1-2
1-1
L
VOLUME/2
10K
2-3
2-2
2-1
R
TREBLE
L
C8
100nF
R7
10k
V_REFF
IC1A
LM358D
C10
10uF
TRIBLE/2
50k
OUT-T-L
GND_V
R
C9
100nF
R8
10k
IC2A
LM358D
C11
1uF
TRIBLE/1
50k
OUT-T-R
C IC
V+
V-
C19
100nF
C20
10nF
C21
10nF
C22
100nF
OUTPUT
OUT-BASS
OB
OUT-BASS-2
OUT-BASS-1
OUT-T-L
OT
OUT-LR-3
OUT-LR-2
OUT-T-R
OUT-LR-1
SUPPLY
if simetris supply
PSU-1
PSU-2
PSU-3
PSU
C4
10uF
C1
100nF
C5
10uF
C2
100nF
GND
if single supply
C6
10uF
C3
100nF
R1
10k
R2
10k
C7
1uF
R4
0R opt
R3
0R opt
R5
0R opt
R6
0R opt
BASS
H1
H2
H3
H4
C12
10uF
R9
100k
R10
10k opt
R11
100k
C13
10uF
R12
10k opt
R13
100k
IC1B
LM358D
R14
10k
R15
10k
R16
10k
IC2B
LM358D
C14
220nF
C15
opt
C16
100nF
C17
opt
C18
1uF
BASS
50k
OUT-BASS
Made by: MR. SOttong
TC 2.1
11 ct 2020