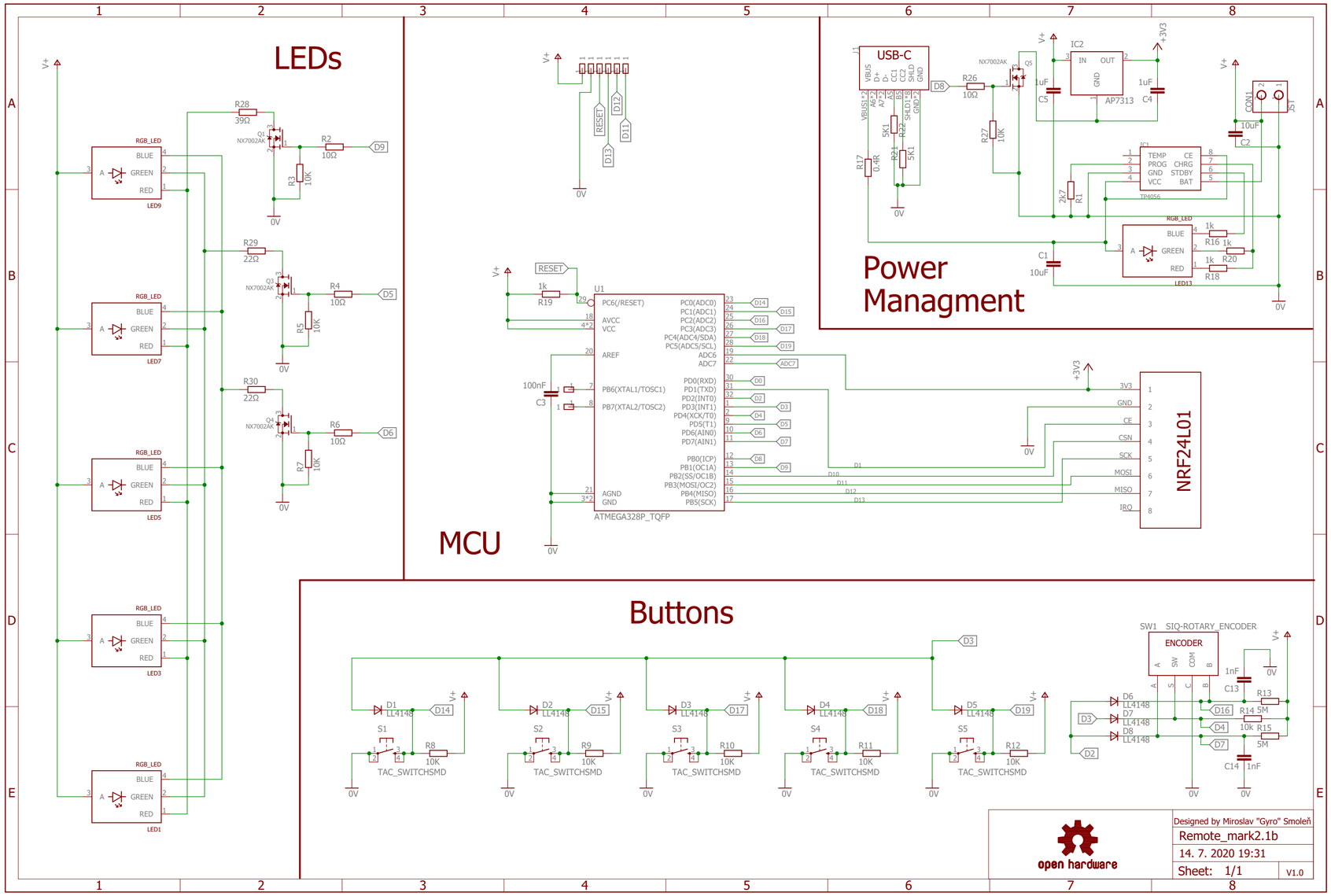
LEDs
Power Managment
MCU
Buttons
USB-C
IC2
AP7313
TP4056
ATMEGA328P_TQFP
NRF24L01
ENCODER
SW1 SIQ-ROTARY_ENCODER
TAC_SWITCHSMD
RGB_LED
open hardware
Designed by Miroslav "Gyro" Smoleň
Remote_mark2.1b
14. 7. 2020 19:31
Sheet: 1/1
V1.0

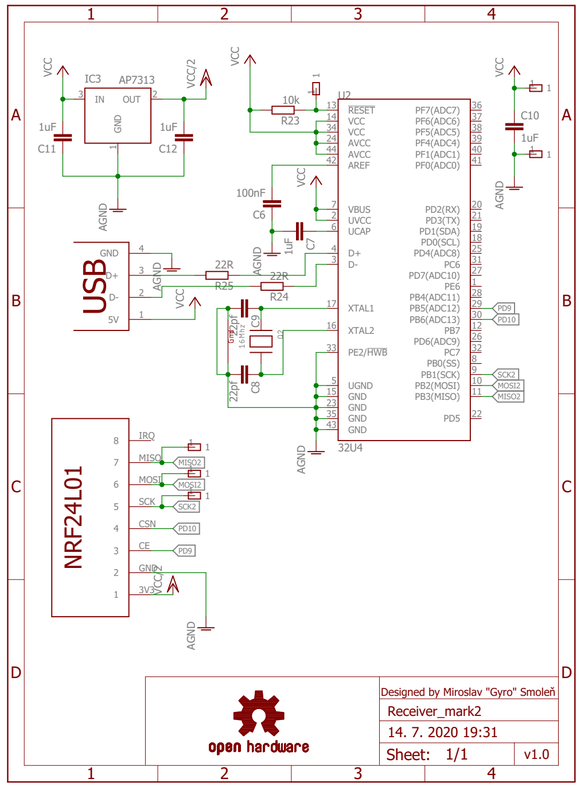
IC3
AP7313
IU2
32U4
USB
NRF24L01
open hardware
Designed by Miroslav "Gyro" Smoleň
Receiver_mark2
14. 7. 2020 19:31
Sheet: 1/1
v1.0