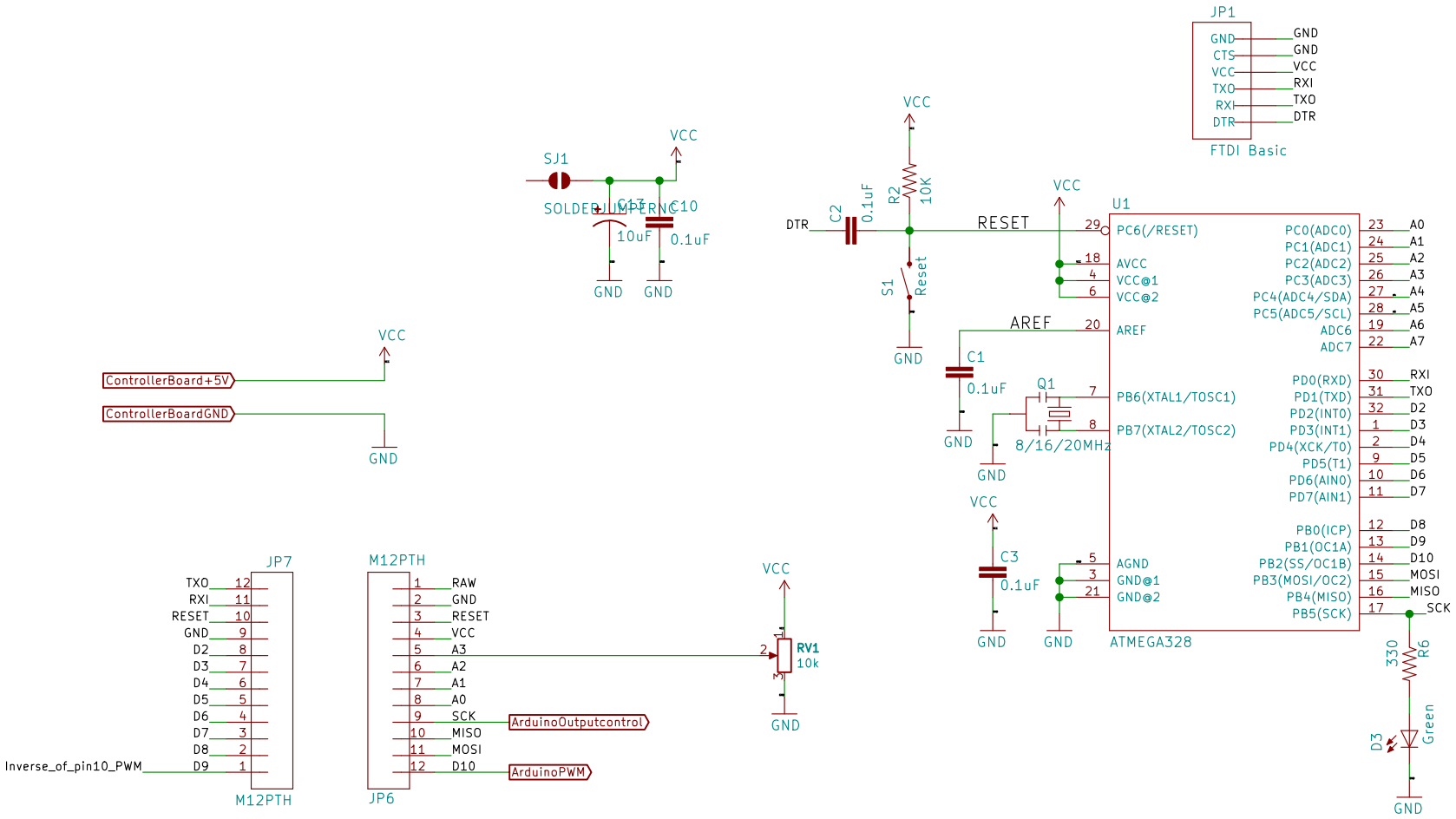
JP1
GND
CTS
VCC
TXO
RXI
DTR
FTDI Basic
SJ1
SOLDERJUMPER
C17
10uF
C10
0.1uF
VCC
GND
DTR
C2
0.1uF
R2
10K
RESET
S1
Reset
U1
PC6(/RESET)
AVCC
VCC@1
VCC@2
AREF
PB6(XTAL1/TOSC1)
PB7(XTAL2/TOSC2)
AGND
GND@1
GND@2
PC0(ADC0)
PC1(ADC1)
PC2(ADC2)
PC3(ADC3)
PC4(ADC4/SDA)
PC5(ADC5/SCL)
ADC6
ADC7
PD0(RXD)
PD1(TXD)
PD2(INT0)
PD3(INT1)
PD4(XCK/T0)
PD5(T1)
PD6(AIN0)
PD7(AIN1)
PB0(ICP)
PB1(OC1A)
PB2(SS/OC1B)
PB3(MOSI/OC2)
PB4(MISO)
PB5(SCK)
ATMEGA328
C1
0.1uF
Q1
8/16/20MHz
C3
0.1uF
ControllerBoard+5V
ControllerBoardGND
JP7
M12PTH
TXO
RXI
RESET
GND
D2
D3
D4
D5
D6
D7
D8
D9
Inverse_of_pin10_PWM
JP6
RAW
GND
RESET
VCC
A3
A2
A1
A0
SCK
MISO
MOSI
D10
ArduinoOutputcontrol
ArduinoPWM
RV1
10k
R6
330
D3
Green