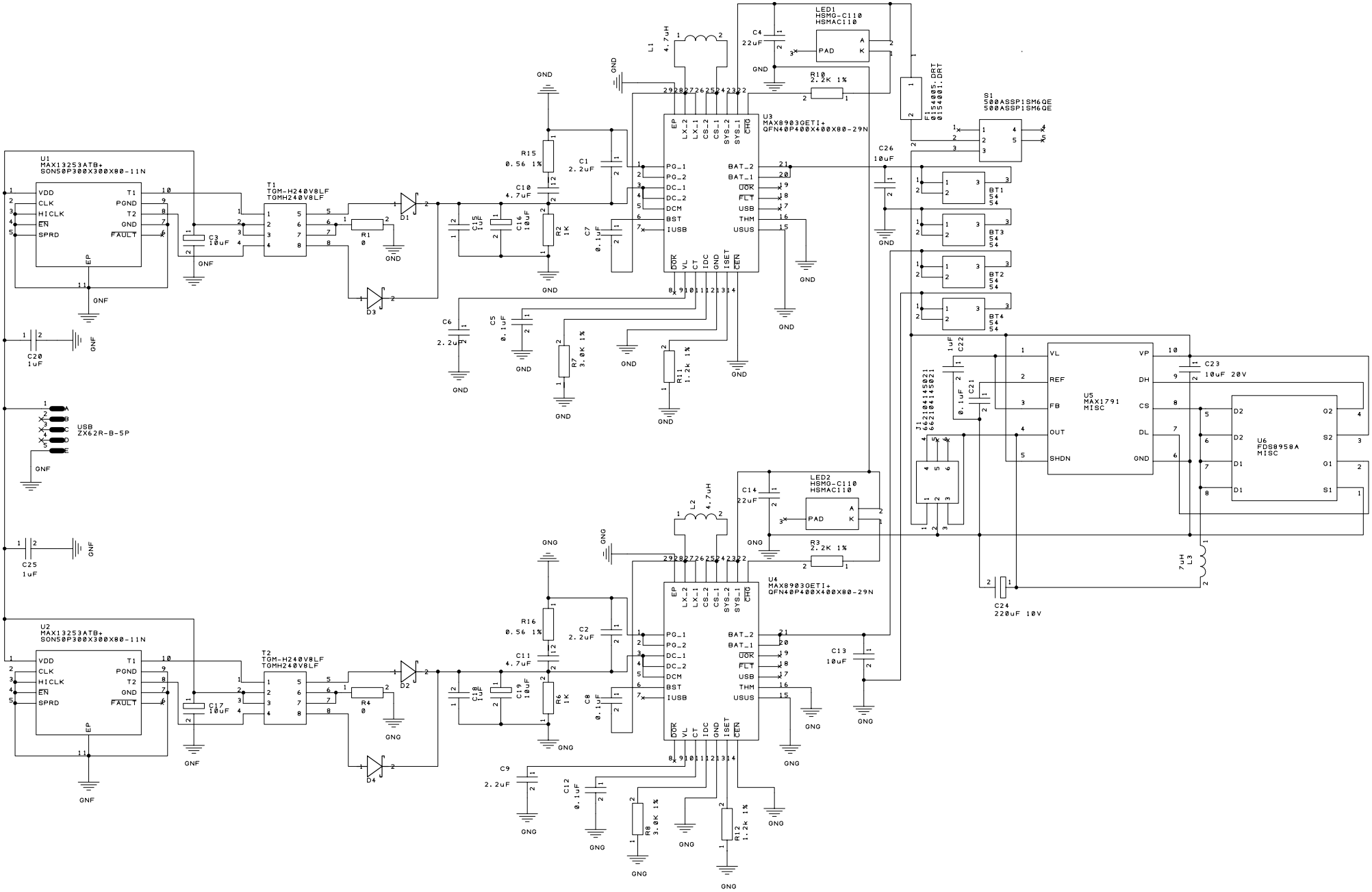
U1
MAX13253ATB+
SON50P300X300X80-11N
VDD
CLK
HICLK
EN
SPRD
T1
PGND
T2
GND
FAULT
EP
C3
10uF
GNF
C20
1uF
USB
ZX62R-B-5P
C25
1uF
U2
MAX13253ATB+
SON50P300X300X80-11N
C17
10uF
T1
TGM-H240V8LF
TGMH240V8LF
T2
TGM-H240V8LF
TGMH240V8LF
R1
0
R4
0
D1
D2
D3
D4
C15
1uF
C16
10uF
C18
1uF
C19
10uF
R15
0.56 1%
R16
0.56 1%
C10
4.7uF
C11
4.7uF
R2
1K
R6
1K
C1
2.2uF
C2
2.2uF
C7
0.1uF
C8
0.1uF
C6
2.2uF
C9
2.2uF
C5
0.1uF
C12
0.1uF
R7
3.0K 1%
R8
3.0K 1%
R11
1.2k 1%
R12
1.2k 1%
L1
4.7uH
L2
4.7uH
U3
MAX8903GETI+
QFN40P400X400X80-29N
U4
MAX8903GETI+
QFN40P400X400X80-29N
EP
LX_2
LX_1
CS_2
CS_1
SYS_2
SYS_1
CHG
PG_1
PG_2
DC_1
DC_2
DCM
BST
IUSB
BAT_2
BAT_1
UOK
FLT
USB
THM
USUS
DOK
VL
CT
IDC
GND
ISET
CEN
LED1
HSMG-C110
HSMAC110
LED2
HSMG-C110
HSMAC110
PAD
A
K
C4
22uF
C14
22uF
R10
2.2K 1%
R3
2.2K 1%
C26
10uF
C13
10uF
F1
01154005.DRT
01154001.DRT
S1
500ASSP1SM6QE
500ASSP1SM6QE
BT1
54
BT3
54
BT2
54
BT4
54
J1
662104145021
C22
1uF
C21
0.1uF
U5
MAX1791
MISC
VL
REF
FB
OUT
SHDN
VP
DH
CS
DL
GND
C23
10uF 20V
U6
FDS8958A
MISC
D2
D1
G2
S2
G1
S1
7uH
L3
C24
220uF 10V
GND
GNG