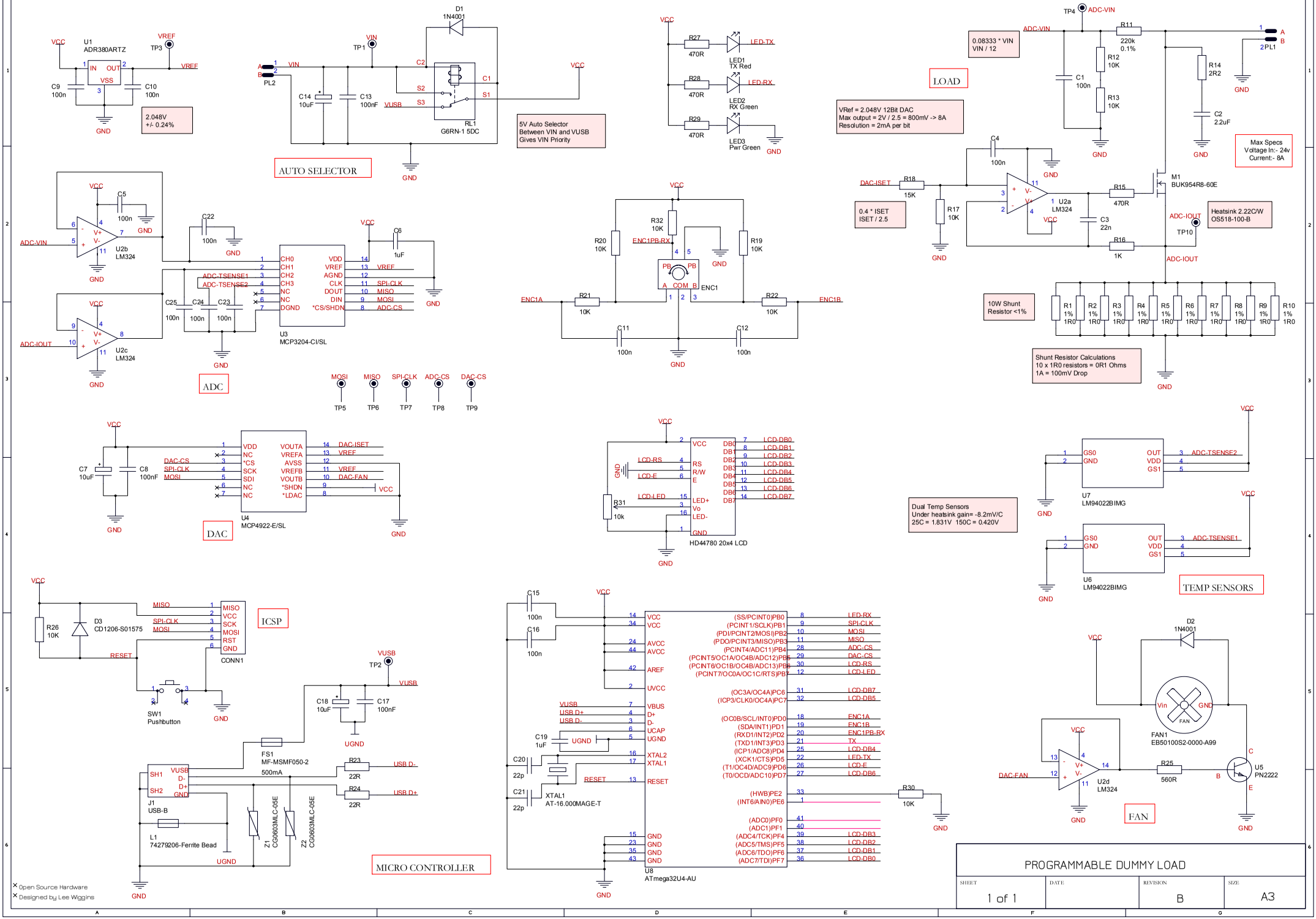
Schem1
A3-Lee
U1
ADR380ARTZ
VCC
VREF
TP3
IN
OUT
VSS
C9
100n
C10
100n
GND
2.048V
+/- 0.24%
D1
1N4001
VIN
TP1
PL2
C14
10uF
C13
100nF
VUSB
C2
C1
S2
S1
S3
RL1
G6RN-1 5DC
5V Auto Selector
Between VIN and VUSB
Gives VIN Priority
AUTO SELECTOR
R27
470R
LED-TX
LED1
TX Red
R28
470R
LED-RX
LED2
RX Green
R29
470R
LED3
Pwr Green
TP4
ADC-VIN
R11
220k
0.1%
R12
10K
R13
10K
C1
100n
R14
2R2
C2
2.2uF
PL1
0.08333 * VIN
VIN / 12
LOAD
VRef = 2.048V 12Bit DAC
Max output = 2V / 2.5 = 800mV -> 8A
Resolution = 2mA per bit
Max Specs
Voltage In:- 24v
Current:- 8A
C4
100n
DAC-ISET
R18
15K
R17
10K
0.4 * ISET
ISET / 2.5
U2a
LM324
R15
470R
M1
BUK954R8-60E
C3
22n
R16
1K
ADC-IOUT
TP10
Heatsink 2.22C/W
OS518-100-B
10W Shunt
Resistor <1%
R1 1% 1R0
R2 1% 1R0
R3 1% 1R0
R4 1% 1R0
R5 1% 1R0
R6 1% 1R0
R7 1% 1R0
R8 1% 1R0
R9 1% 1R0
R10 1% 1R0
Shunt Resistor Calculations
10 x 1R0 resistors = 0R1 Ohms
1A = 100mV Drop
U2b
LM324
C5
100n
ADC-VIN
C22
100n
C6
1uF
CH0
CH1
CH2
CH3
NC
NC
DGND
VDD
VREF
AGND
CLK
DOUT
DIN
*CS/SHDN
ADC-TSENSE1
ADC-TSENSE2
SPI-CLK
MISO
ADC-CS
U3
MCP3204-CI/SL
C25
100n
C24
100n
C23
100n
U2c
LM324
ADC-IOUT
ADC
MOSI
MISO
SPI-CLK
ADC-CS
DAC-CS
TP5
TP6
TP7
TP8
TP9
R32
10K
ENC1PB-RX
R20
10K
R19
10K
PB
A
COM
B
ENC1
ENC1A
R21
10K
R22
10K
ENC1B
C11
100n
C12
100n
C7
10uF
C8
100nF
VDD
NC
*CS
SCK
SDI
NC
NC
VOUTA
VREFA
AVSS
VREFB
VOUTB
*SHDN
*LDAC
DAC-ISET
VREF
DAC-FAN
U4
MCP4922-E/SL
DAC
RS
R/W
E
LED+
Vo
LED-
LCD-RS
LCD-E
LCD-LED
R31
10k
HD44780 20x4 LCD
LCD-DB0
LCD-DB1
LCD-DB2
LCD-DB3
LCD-DB4
LCD-DB5
LCD-DB6
LCD-DB7
Dual Temp Sensors
Under heatsink gain= -8.2mV/C
25C = 1.831V 150C = 0.420V
GS0
GND
OUT
VDD
GS1
ADC-TSENSE2
U7
LM94022BIMG
ADC-TSENSE1
U6
LM94022BIMG
TEMP SENSORS
R26
10K
D3
CD1206-S01575
MISO
SPI-CLK
MOSI
RESET
MISO
VCC
SCK
MOSI
RST
GND
CONN1
ICSP
SW1
Pushbutton
TP2
VUSB
C18
10uF
C17
100nF
UGND
FS1
MF-MSMF050-2
500mA
SH1
SH2
VUSB
D-
D+
GND
J1
USB-B
R23
22R
R24
22R
USB D-
USB D+
L1
74279206-Ferite Bead
Z1
CG0603MLC-05E
Z2
CG0603MLC-05E
MICRO CONTROLLER
C15
100n
C16
100n
VCC
VCC
AVCC
AVCC
AREF
UVCC
VBUS
D+
D-
UCAP
UGND
XTAL2
XTAL1
RESET
GND
GND
GND
GND
C19
1uF
C20
22p
C21
22p
XTAL1
AT-16.000MAGE-T
(SS/PCINT0)PB0
(PCINT1/SCLK)PB1
(PDI/PCINT2/MOSI)PB2
(PDO/PCINT3/MISO)PB3
(PCINT4/ADC11)PB4
(PCINT5/OC1A/OC4B/ADC12)PB5
(PCINT6/OC1B/OC4B/ADC13)PB6
(PCINT7/OC0A/OC1C/RTS)PB7
(OC3A/OC4A)PC6
(ICP3/CLK0/OC4A)PC7
(OC0B/SCL/INT0)PD0
(SDA/INT1)PD1
(RXD1/INT2)PD2
(TXD1/INT3)PD3
(ICP1/ADC8)PD4
(XCK1/CTS)PD5
(T1/OC4D/ADC9)PD6
(T0/OCD/ADC10)PD7
(HWB)PE2
(INT6/AIN0)PE6
(ADC0)PF0
(ADC1)PF1
(ADC4/TCK)PF4
(ADC5/TMS)PF5
(ADC6/TDO)PF6
(ADC7/TDI)PF7
LED-RX
SPI-CLK
MOSI
MISO
ADC-CS
DAC-CS
LCD-RS
LCD-LED
LCD-DB7
LCD-DB5
ENC1A
ENC1B
ENC1PB-RX
TX
LCD-DB4
LED-TX
LCD-E
LCD-DB6
R30
10K
LCD-DB3
LCD-DB2
LCD-DB1
LCD-DB0
U8
ATmega32U4-AU
D2
1N4001
FAN1
EB50100S2-0000-A99
Vin
GND
FAN
DAC-FAN
U2d
LM324
R25
560R
U5
PN2222
C
B
E
FAN
Open Source Hardware
Designed by Lee Wiggins
PROGRAMMABLE DUMMY LOAD
SHEET
1 of 1
DATE
REVISION
B
SIZE
A3