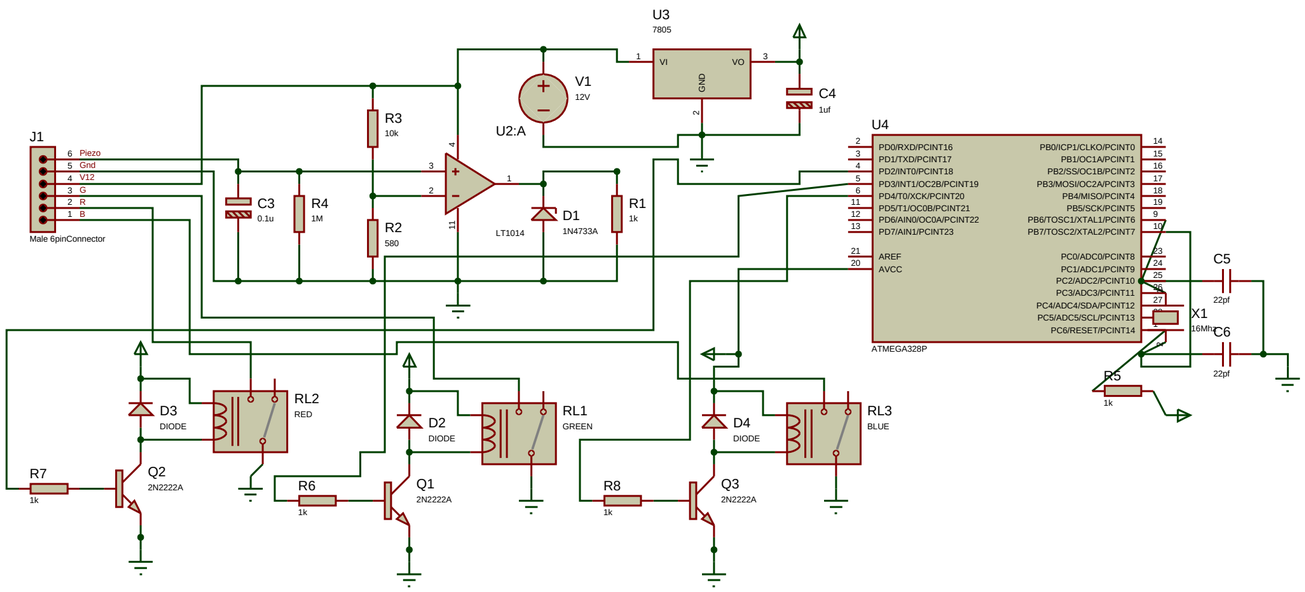
U3
7805
VI
VO
GND
C4
1uf
V1
12V
U2:A
R3
10k
J1
6 Piezo
5 Gnd
4 V12
3 G
2 R
1 B
Male 6pinConnector
C3
0.1u
R4
1M
R2
580
D1
1N4733A
LT1014
R1
1k
U4
PD0/RXD/PCINT16
PD1/TXD/PCINT17
PD2/INT0/PCINT18
PD3/INT1/OC2B/PCINT19
PD4/T0/XCK/PCINT20
PD5/T1/OC0B/PCINT21
PD6/AIN0/OC0A/PCINT22
PD7/AIN1/PCINT23
AREF
AVCC
PB0/ICP1/CLKO/PCINT0
PB1/OC1A/PCINT1
PB2/SS/OC1B/PCINT2
PB3/MOSI/OC2A/PCINT3
PB4/MISO/PCINT4
PB5/SCK/PCINT5
PB6/TOSC1/XTAL1/PCINT6
PB7/TOSC2/XTAL2/PCINT7
PC0/ADC0/PCINT8
PC1/ADC1/PCINT9
PC2/ADC2/PCINT10
PC3/ADC3/PCINT11
PC4/ADC4/SDA/PCINT12
PC5/ADC5/SCL/PCINT13
PC6/RESET/PCINT14
ATMEGA328P
C5
22pf
X1
16Mhz
C6
22pf
R5
1k
D3
DIODE
RL2
RED
R7
1k
Q2
2N2222A
D2
DIODE
RL1
GREEN
R6
1k
Q1
2N2222A
D4
DIODE
RL3
BLUE
R8
1k
Q3
2N2222A