THIS DOCUMENT AND THE DATA DISCLOSED HEREIN OR HEREWITH IS THE PROPERTY OF ALTIUM LIMITED AND MAY BE FREELY DISTRIBUTED IN WHOLE. ALL RIGHTS ARE RESERVED AND EXPRESS OR IMPLIED WARANTEE GIVEN.

REVISION	DESCRIPTION	DATE	APPROVED

BATTERY SOLAR CHARGER

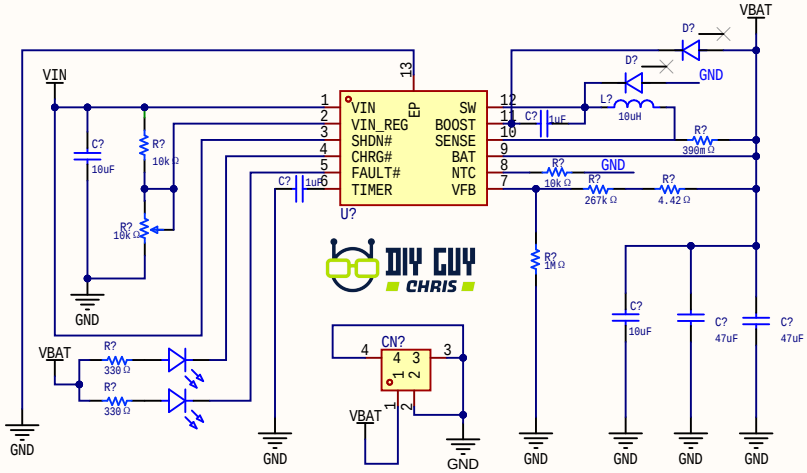

DIY GUY CHRIS	PROJECT	Altium	
DATE: *	PROJECT REVISION: *	DOCUMENT REVISION: *	DESIGN ITEM:
REFERENCE DOCUMENTS	TITLE *		
BOM:	SIZE A4	DWG NO.	REV
PCB DWG: Default - All Constraints	SCALE:	FILE NAME 1_Solar Battery charger.schdoc	SHEET 1 OF 1