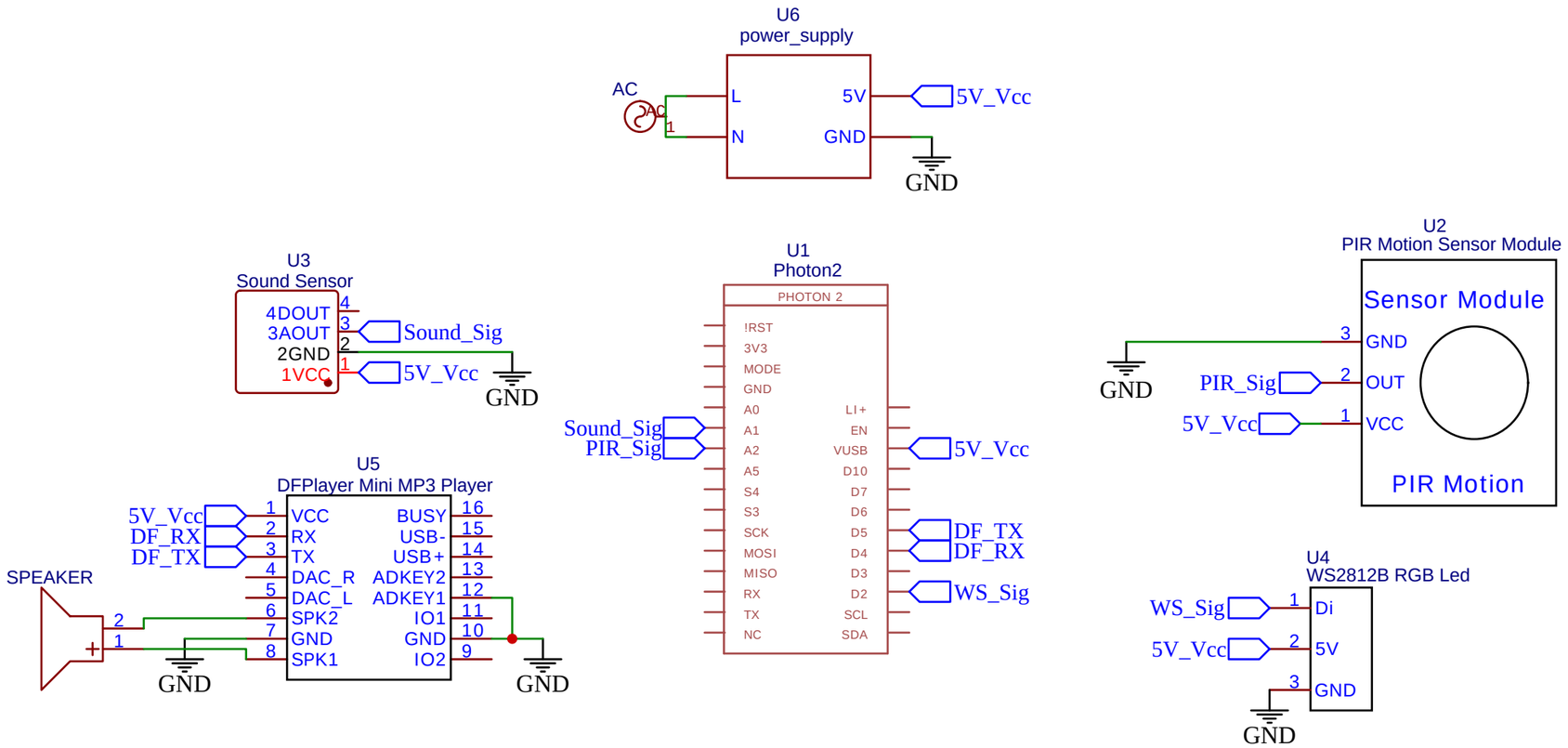

TITLE: Star		REV: 1.0
EasyEDA	Company: Coders Cafe	Sheet: 1/1
	Date: 2024-11-27 Drawn By: Nekhil R	