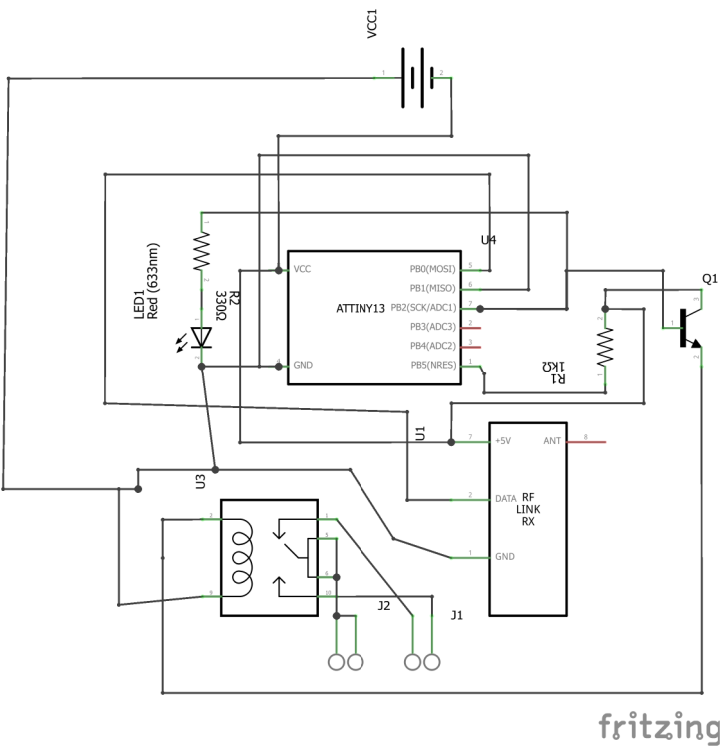
VCC1
U4
ATTINY13
VCC
GND
PB0(MOSI)
PB1(MISO)
PB2(SCK/ADC1)
PB3(ADC3)
PB4(ADC2)
PB5(NRES)
LED1
Red (633nm)
R2
330Ω
R1
1KΩ
Q1
U1
+5V
ANT
DATA
GND
RF
LINK
RX
U3
J2
J1
fritzing