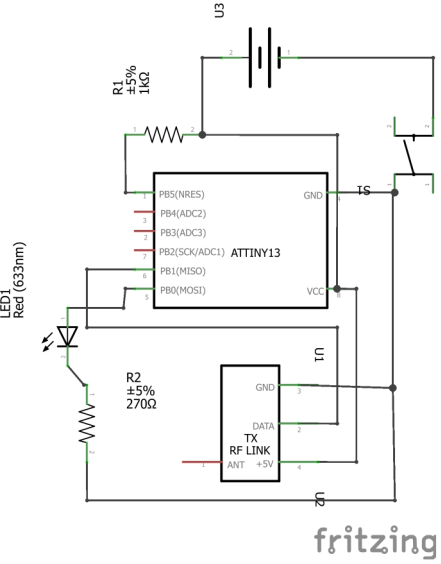
U3
R1
±5%
1kΩ
PB5(NRES)
PB4(ADC2)
PB3(ADC3)
PB2(SCK/ADC1)
PB1(MISO)
PB0(MOSI)
ATTINY13
GND
VCC
S1
LED1
Red (633nm)
R2
±5%
270Ω
U1
GND
DATA
TX
RF LINK
ANT
+5V
U2
fritzing